DRAWING NO.
AWX-4253-00

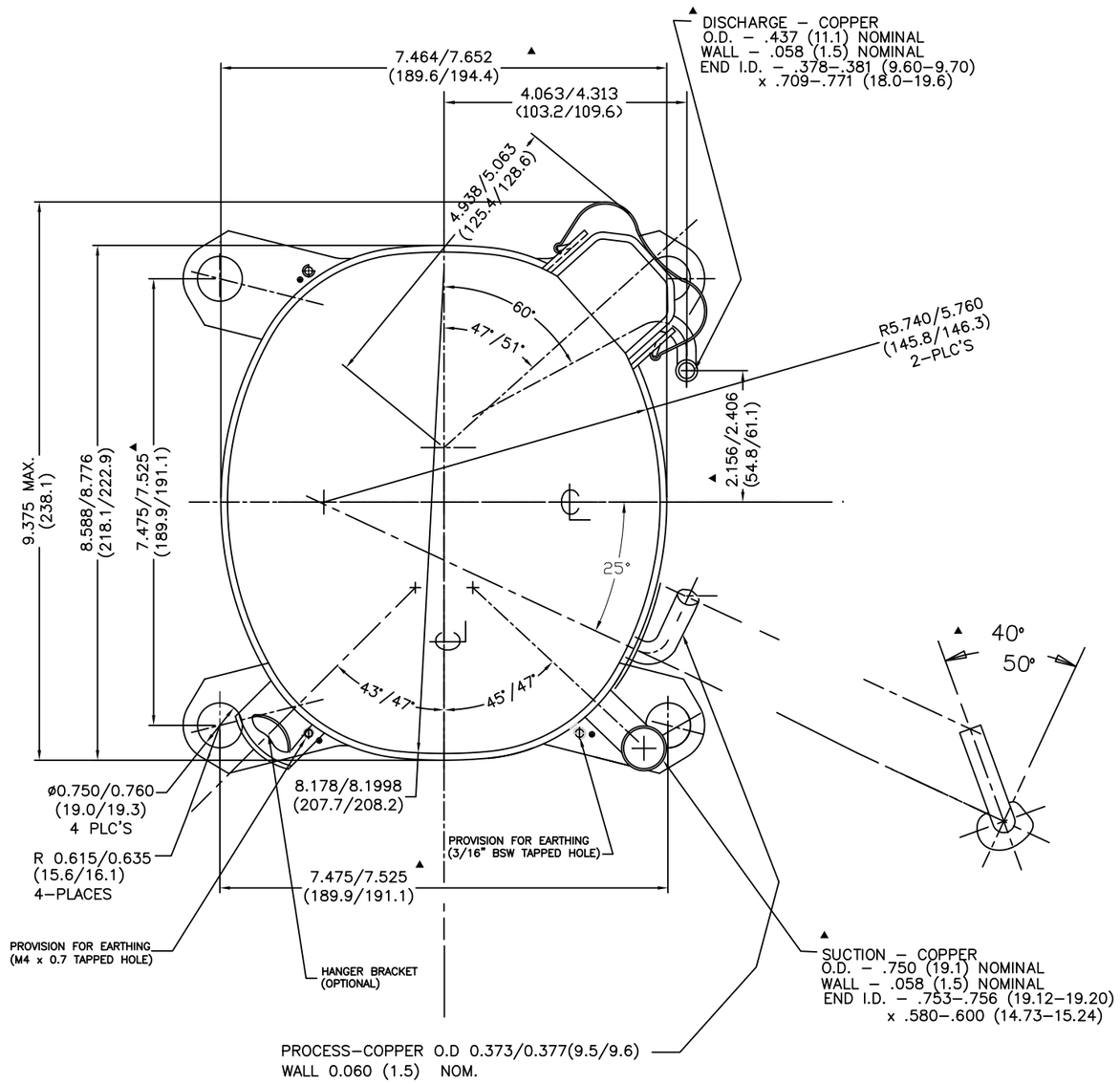

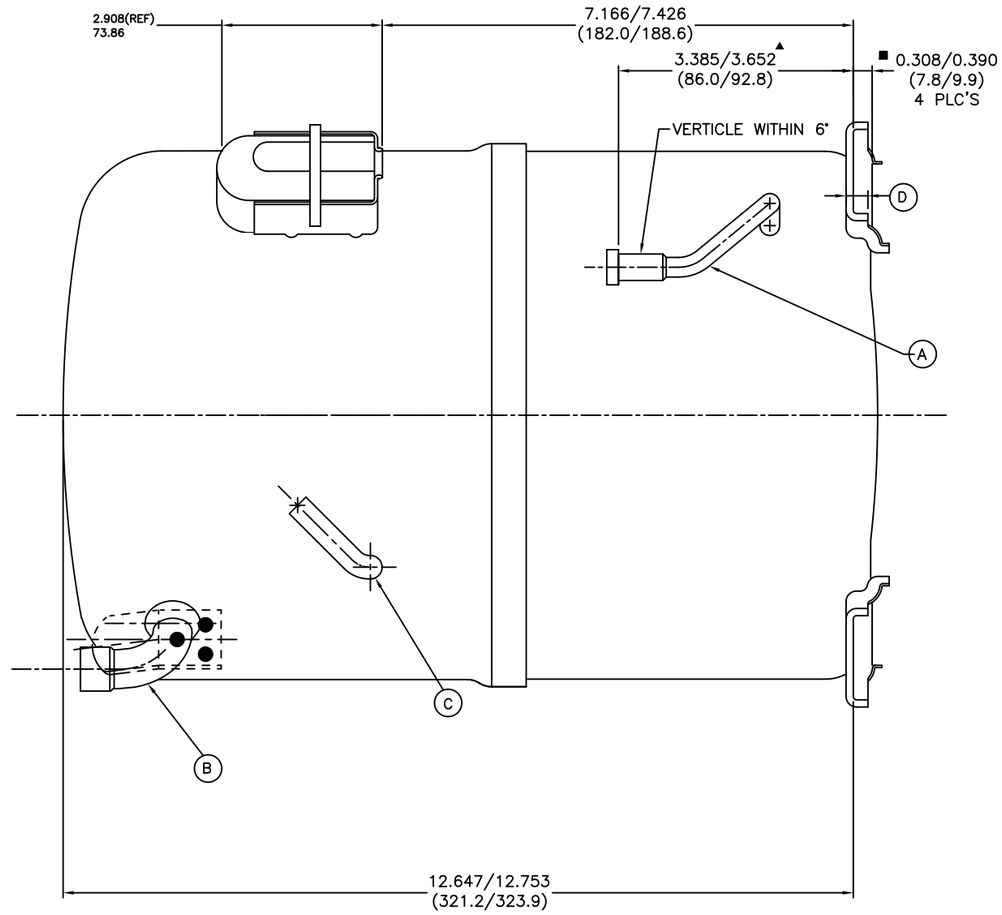

NOTE :

DIMENSIONING= INCHES / MILLIMETERS OR INCHES (MILLIMETERS)

A	34867
B	14955531
C	14952651
D	AWX-2102-01