DRAWING NO.
SU1971-28

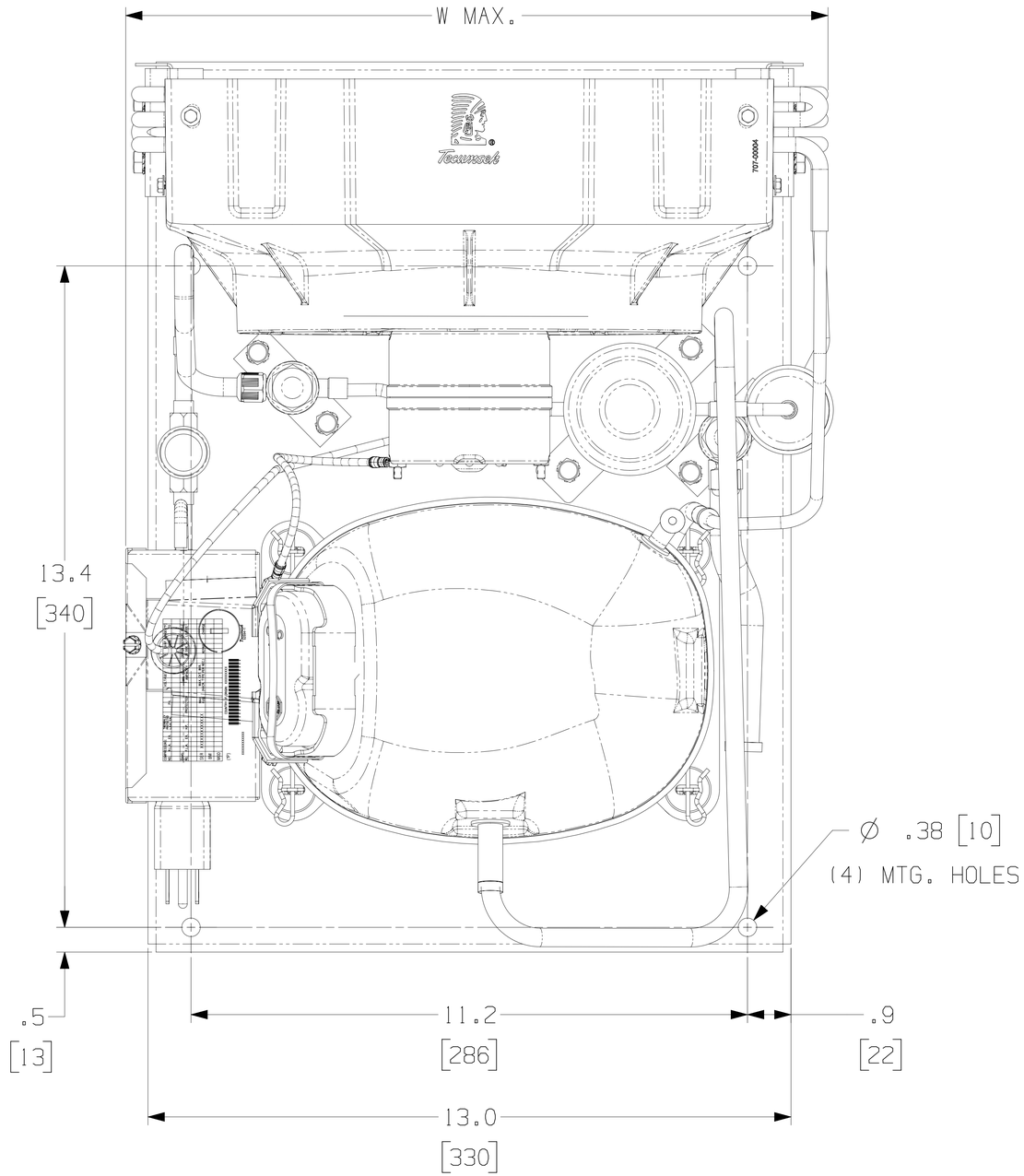

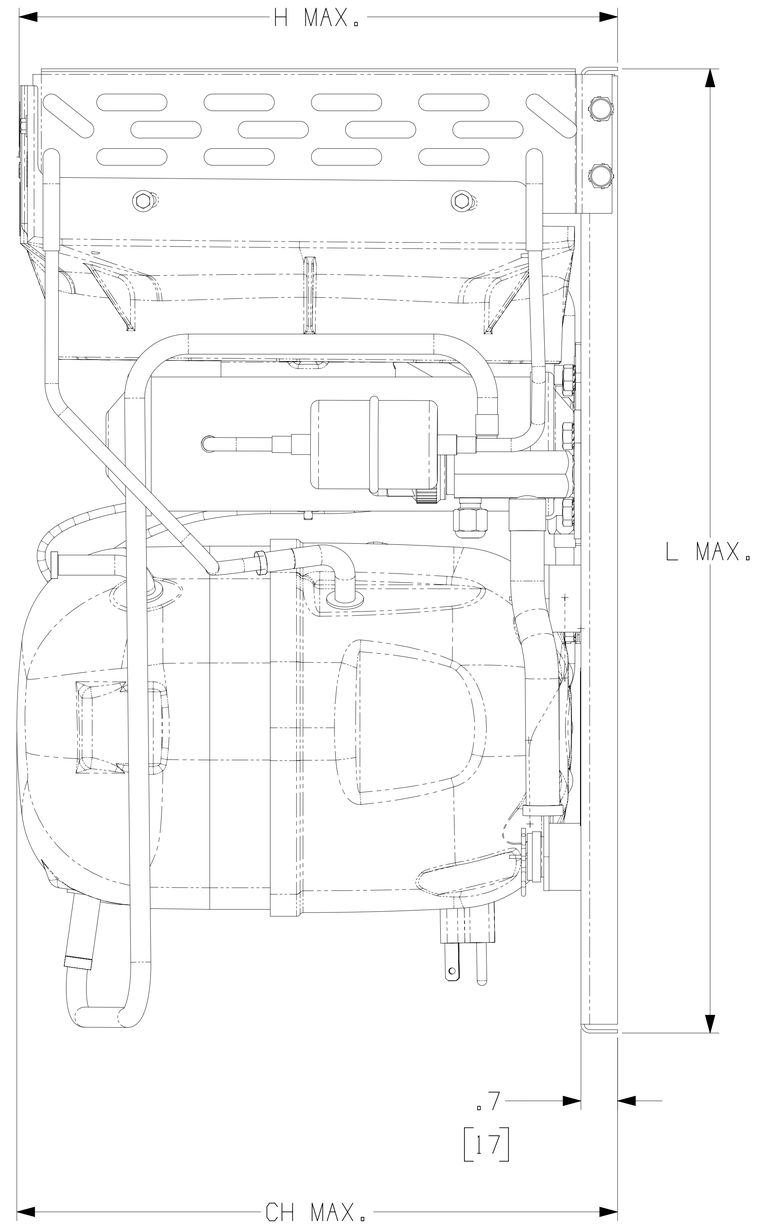

L	W	H	CH
18.0 [457]	14.2 [361]	11.2 [283]	11.2 [284]

NOTE:
DIMENSIONING = INCHES [MILLIMETERS]

3D,VNXB

ENGLISH

Q.A. SYMBOLS
✱ = CATEGORY I
▲ = CATEGORY II
■ = CATEGORY III
= CATEGORY IV

UNIT

REL	CHANGE	DATE
--	EC100399	---
LT	LC	

THIS DRAWING AND DESIGN IS THE PROPERTY OF TECUMSEH PRODUCTS CO. AND CONTAINS PROPRIETARY INFORMATION. RETENTION AND USE OF THIS DRAWING IS RESTRICTED TO THE PERSONS AND COMPANIES FOR WHOM IT WAS PREPARED. THIS INFORMATION CONTAINED HEREIN MAY NOT BE DISCLOSED TO OTHERS OR REPRODUCED IN WHOLE OR IN PART WITHOUT THE WRITTEN PERMISSION OF TECUMSEH PRODUCTS CO. ANY USE OF THIS DESIGN OR INFORMATION FOR ANY PURPOSE OTHER THAN THE ORIGINAL INTENT IS PROHIBITED AND MAY BE ACTIONABLE. THIS DRAWING IS TO BE RETURNED UPON REQUEST.

DO NOT SCALE THIS DRAWING. UNLESS OTHERWISE NOTED, MATERIAL MUST NOT BE ORDERED UNTIL RECEIVED OR AT CONSENT OF ASSEMBLY.

DIS.CODE: --

NAME: SALES CONDENSING UNIT DRAWING

SCALE: 1:1 & NOTED

THIS PRINT SUPERSEDES ALL PRINTS PRIOR TO

TECUMSEH PRODUCTS CO.
ANN ARBOR, MICHIGAN

MATERIAL: NOTED

DRAWING NO. SU1971-28

BANNER