DRAWING NO.
SU1971-34

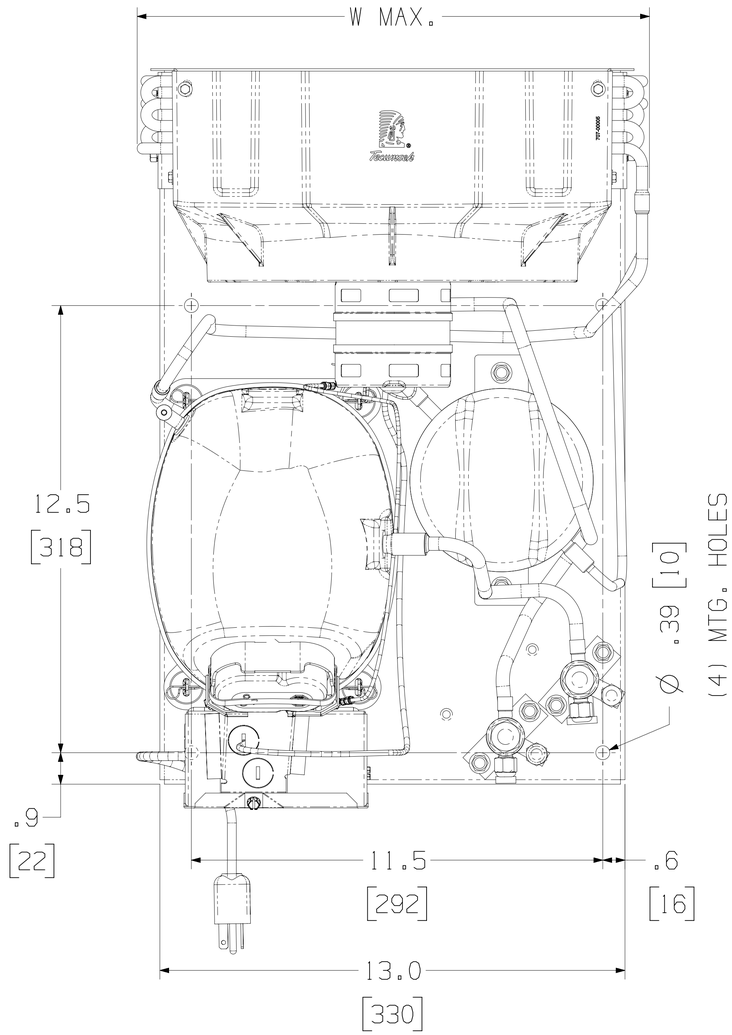

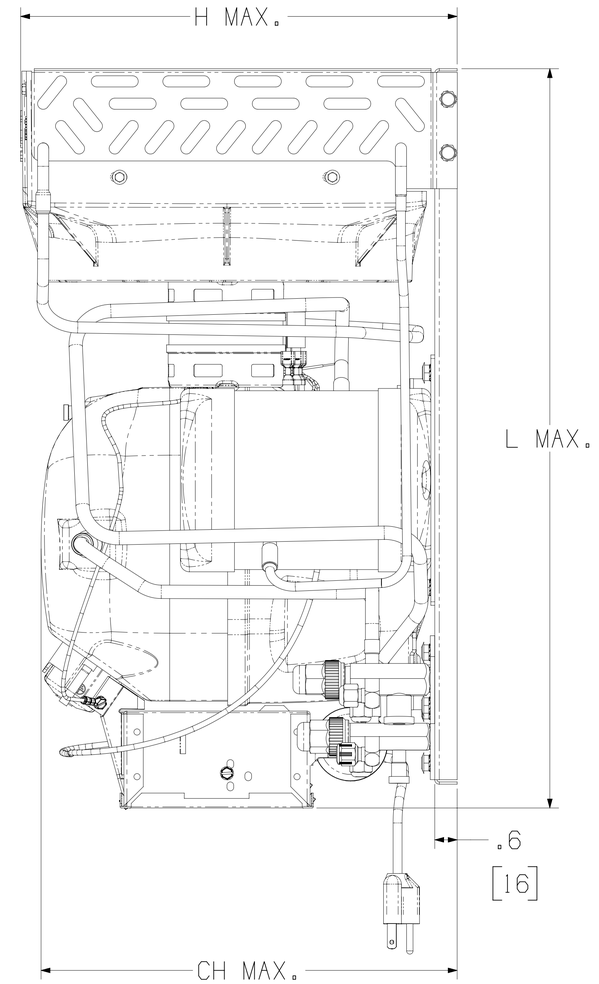

L MAX.	W MAX.	H MAX.	CH MAX.
20.7 [525]	14.3 [364]	12.2 [310]	11.6 [295]

NOTE:
DIMENSIONING = INCHES [MILLIMETERS]

3D,VNX10

ENGLISH

Q.A. SYMBOLS
✱ = CATEGORY I
▲ = CATEGORY II
■ = CATEGORY III
= CATEGORY IV

UNIT

REL	CHANGE	DATE
--	EC100505	---
LT	LC	

PROGRAM UPGRADE PRODUCTS THE PRODUCT TO BE SHIPPED WILL BE PROGRAMMED AND COMPLETELY TESTED. THE PRODUCT WILL BE SHIPPED WITH THE LATEST SOFTWARE AVAILABLE AT THE TIME OF SHIPMENT. THE PRODUCT WILL HAVE A LABEL ON IT INDICATING THE SOFTWARE VERSION. NOTE THE INFORMATION CONTAINED ON THE LABEL. THE PRODUCT WILL ALSO BE SHIPPED IN PACKAGING THAT INDICATES THE SOFTWARE VERSION. TECUMSEH AND ITS SUPPLIERS DO NOT ASSUME RESPONSIBILITY FOR ANY PROBLEMS THAT MAY ARISE FROM THE USE OF SOFTWARE NOT SHIPPED IN THE PRODUCT. TECUMSEH AND ITS SUPPLIERS DO NOT ASSUME RESPONSIBILITY FOR ANY PROBLEMS THAT MAY ARISE FROM THE USE OF SOFTWARE NOT SPECIFIED BY TECUMSEH. THE SOFTWARE SPECIFIED BY TECUMSEH MUST BE INSTALLED AT THE PLACE OF MANUFACTURE. TECUMSEH AND ITS SUPPLIERS DO NOT ASSUME RESPONSIBILITY FOR ANY LABORS REQUIRED TO REPROGRAM, UPGRADE OR REPAIR PRODUCTS AFTER SHIPMENT FROM THE PLANT.

DIS.CODE
--

NAME
SALES CONDENSING UNIT DRAWING

SCALE
1:2 & NOTED

THIS PRINT SUPERSEDES ALL PRINTS PRIOR TO

TECUMSEH PRODUCTS CO.
ANN ARBOR, MICHIGAN

DRAWING NO.
SU1971-34

DO NOT SCALE THIS DRAWING. ALL TITLES, MATERIALS, TRADE NAMES, MARKINGS, ETC. ARE REQUIRED OF A SUPPLIER, DISPOSITION SYMBOLS.

MATERIAL
NOTED

BANNER