DWG NO.
SU1920-07

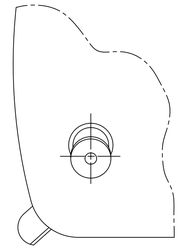

ALT VIEW

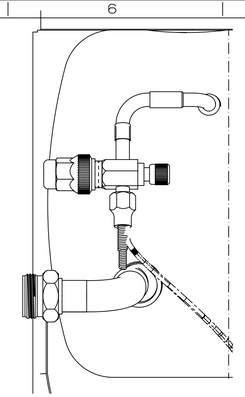

ALT VIEW

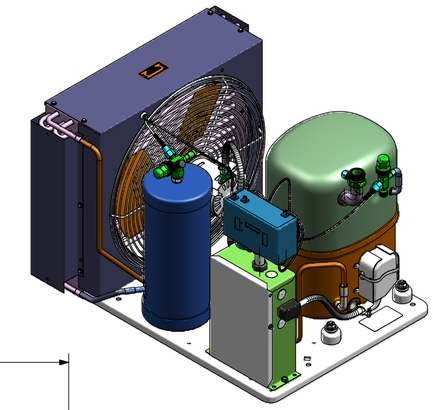

SCALE 3:16

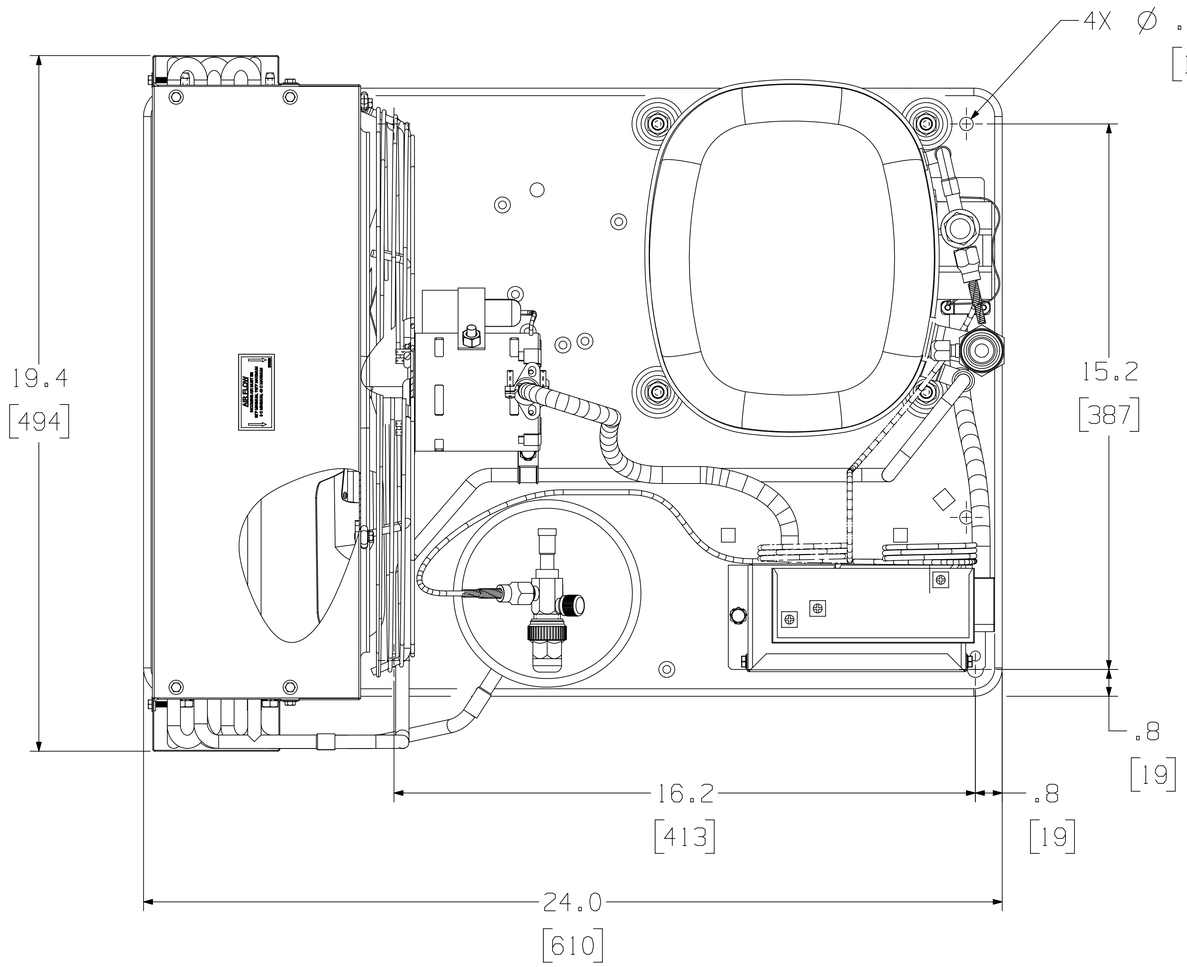

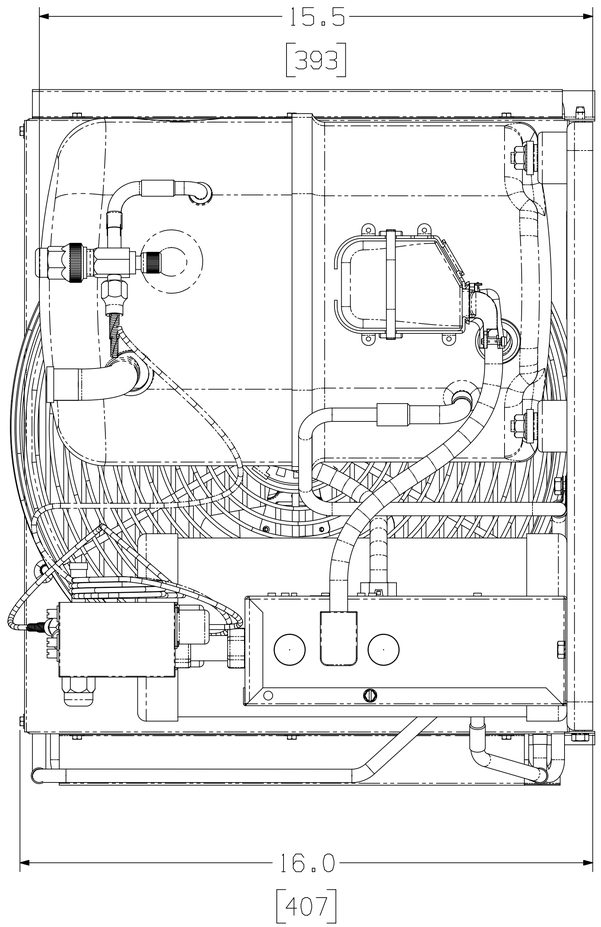

NOTE:
INCHES = [MILLIMETERS]

ENGLISH

Q.A. SYMBOLS
✱ = CATEGORY I
▲ = CATEGORY II
■ = CATEGORY III
= CATEGORY IV

UNIT

REL	LT	LC	CHANGE	DATE	DR.	CK.	APR.
H	--		ECN4000 ATP REDRAWN TO DGU	31MAR20	BD		
G		5F	ECO0450 TS ALTERNATE VIEW UPDATED	26AUG14	TS		
F		4F	ECS7598 TS PROCESS VALVE ROTATED 90°	09APR14	TS		
E		1E	ECN0277 REVISED TUBE 58009-60 TO MOUNT TO BASPLATE REDRAWN IN 3D	23AUG11	N.CLARK		
D	--		#238855-125 REVISED TO MATCH DGU	05JAN01	A.J.L.		
C	--		#238578-002 CHANGED TO MATCH DGU	10APR00	LUCAS		
B	6C		#238227-001 PICTURE REVISED TO MATCH DGU	4/21/99	N.D.F.		
A	--		237235-001 PICTURE REVISED TO MATCH DGU	4/9/99	R.E.S.		
REL			#237559-002	----	DATE		

DO NOT SCALE THIS DRAWING. ALL DIMENSIONS MUST BE MET AFTER MATERIAL HAS BEEN RECEIVED OR AT COMPLETION OF PROCESS.

DIS.CODE

DESCRIPTION
SALES UNIT DRAWING

SCALE 1:1 & NOTED

THIS PRINT SUPERSEDES ALL PRINTS PRIOR TO

TECUMSEH PRODUCTS CO.
ANN ARBOR, MICHIGAN

MATERIAL
NOTED

DWG NO.
SU1920-07