DRAWING NO. SU1920-7

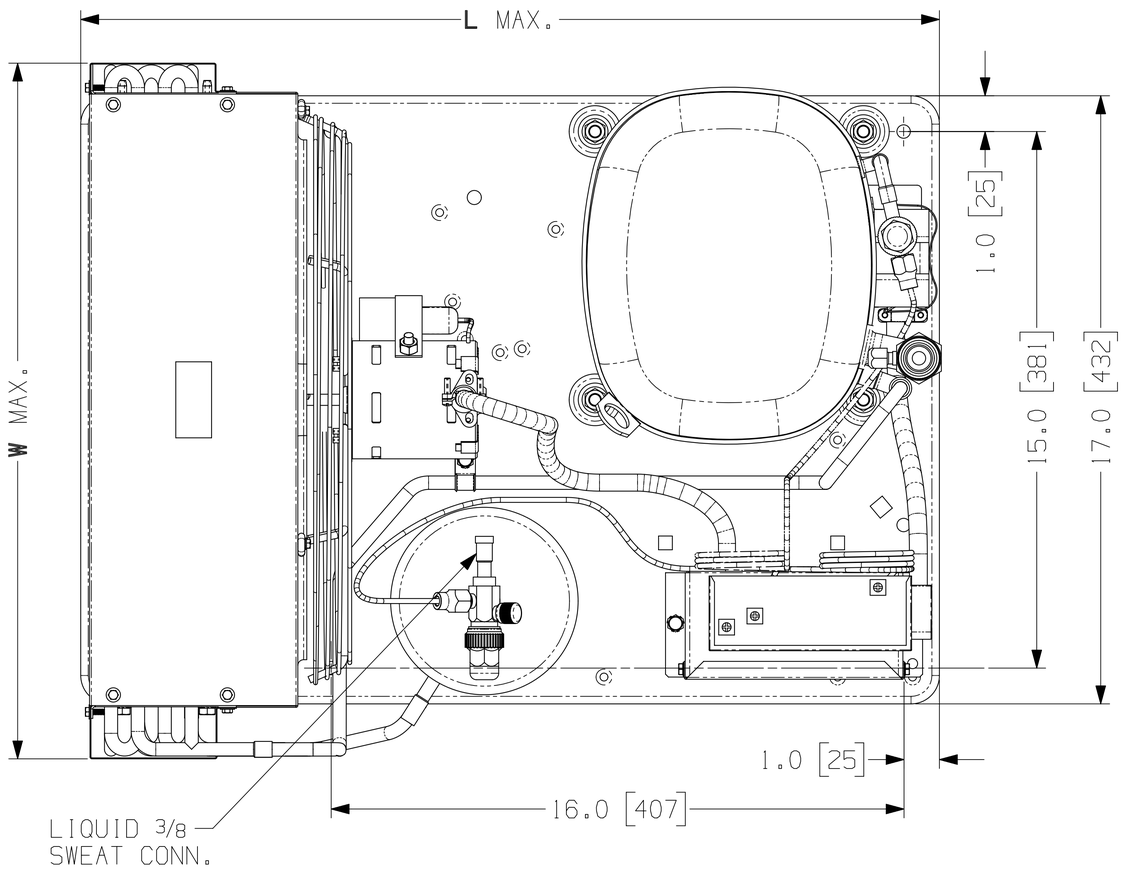

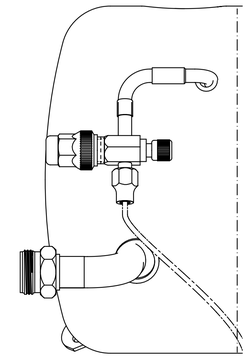

Ⓖ ALT. SUCTION VIEWS

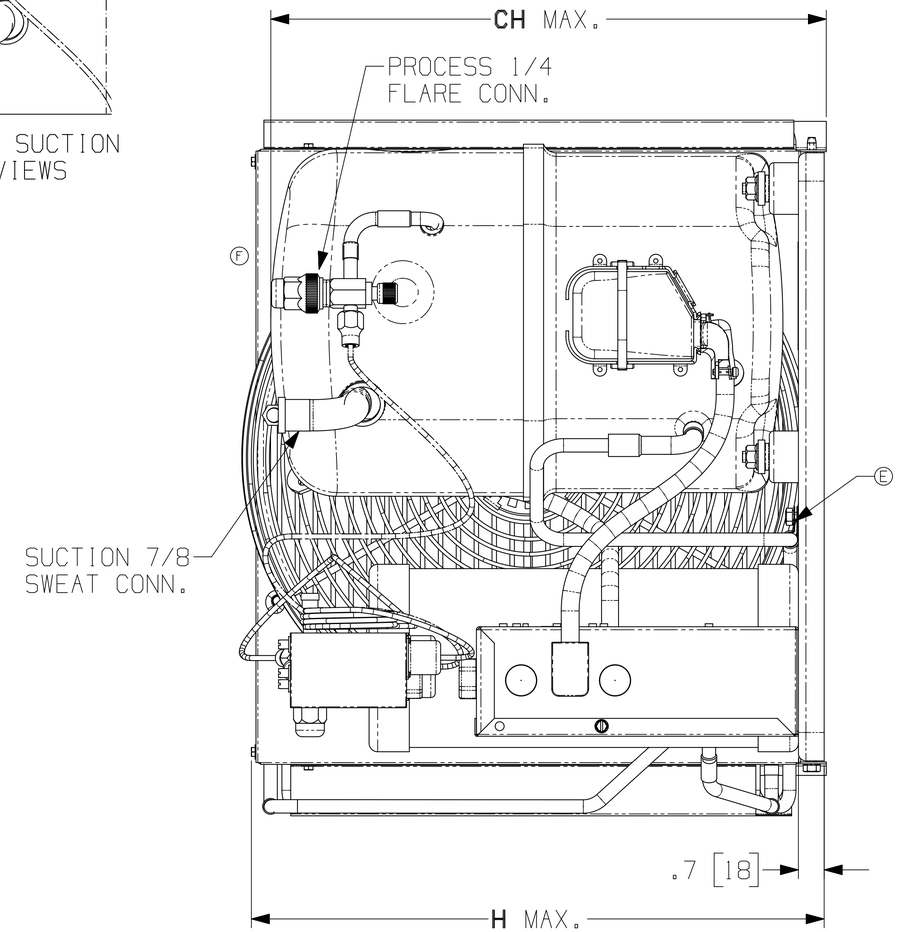

L	W	H	CH
24.0 [610]	19.4 [493]	16.2 [411]	15.6 [396]

NOTE!
DIMENSIONING = INCHES [MILLIMETERS]

AV

Q.A. SYMBOLS
✱ = CATEGORY I
▲ = CATEGORY II
■ = CATEGORY III
= CATEGORY IV

LT	LC	CHANGE	DATE
G	5F	E20AH60 ALTERNATE VIEW UPDATED	TS 26AUG14
F	4F	EC57566 PROCESS VALVE ROTATED 90°	TS 19APR14
E	1E	EC42277 REVISED TUBE 58009-60 TO MATCH TO BASEPLATE REDRAWN	N.CLARK 23AUG11
D	—	#238855-025 REVISED TO MATCH DGU	A.J.L. 05JUN01
C	—	#235578-002 CHANGED TO MATCH DGU	LUCAS 10APR00
B	6C	#23827-001 PICTURE REVISED TO MATCH DGU	N.J.E. 4/21/99
A	—	237305-001 PICTURE REVISED TO MATCH DGU	R.E.S. 4/9/99
REL		237559-002	—

DIS.CODE

NAME HERMETIC CONDENSING UNIT

SCALE 1=2

THIS PRINT SUPERSEDES ALL PRINTS PRIOR TO

TECUMSEH PRODUCTS CO.
ANN ARBOR, MICHIGAN

MATERIAL NOTED

DRAWING NO. SU1920-7

DO NOT SCALE THIS DRAWING. UNLESS MATERIAL IS MUST NOT BE WAIVED, ITEMS REJECTED FOR A COMPANY VIOLATION.

BANNER