PART NO.
SU1909-28

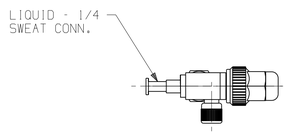

ALTERNATE
LIQUID VALVE
VIEW

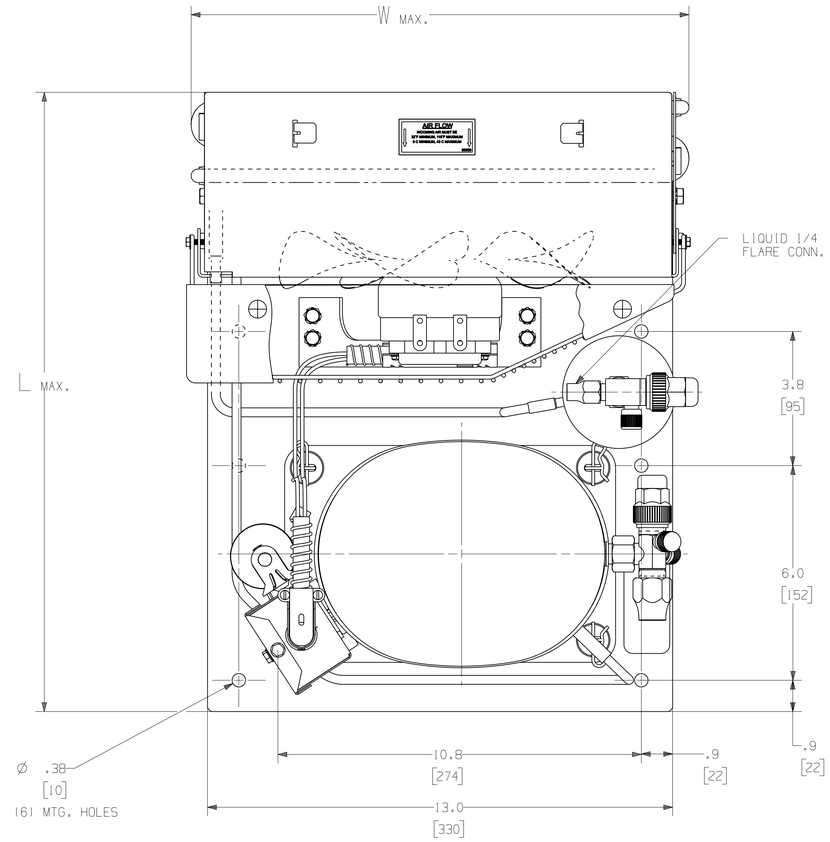

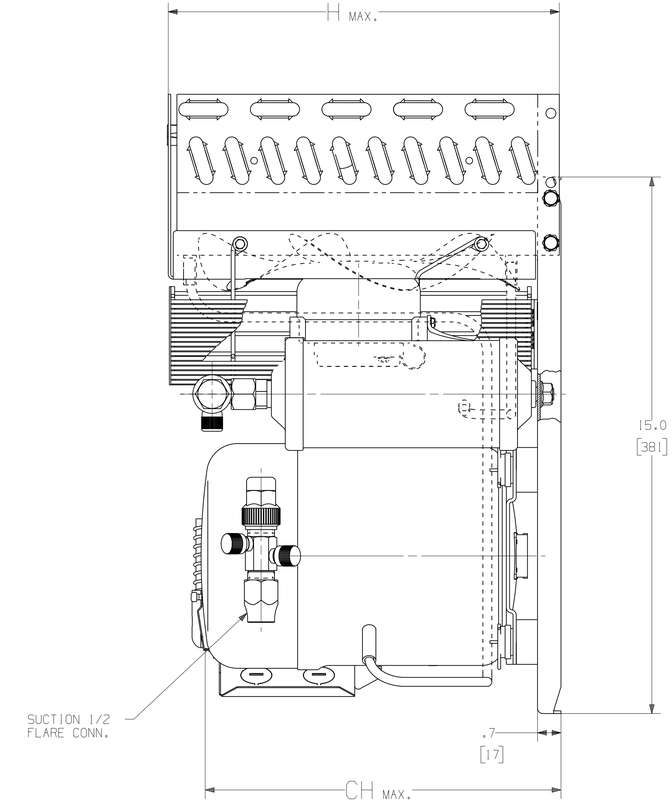

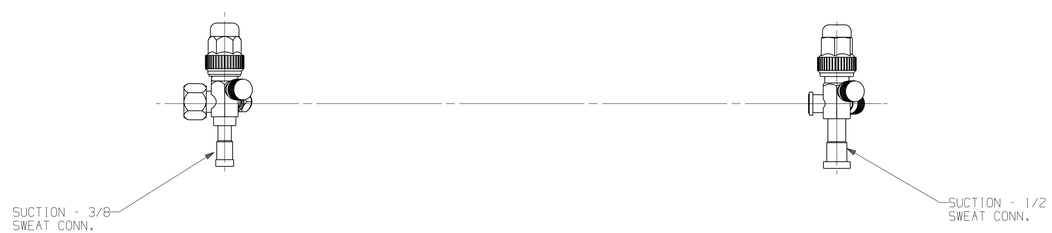

ALTERNATE
SUCTION VALVE
VIEWS

L	W	H	CH
17.4 [443]	14.0 [355]	10.9 [277]	10.1 [257]

LT	LC	CHANGE	DATE	DIS.CODE
J	—	ECO1114 REDRAWN IN 3D NO CHANGE	TS 16SEP03	
H	—	#243140-004 REVISED PITCHES TO MATCH DOC	WRIGHT 24JUN04	
G	—	#242908-000 CORRECTED PRINT ERRORS	LUCAS 01MAR04	
F	—	#237305-001 REVISED PITCHES TO MATCH DOC	R.E.S. 29/29/99	
E	—	#23821-002 ADDED ALTERNATE SUCTION & LIQUID VALVE VIEWS	W.E.M. 4-04-96	
D	—	REDRAWN & UP DATED (WAS "ON "C" SIZE)		

PROPERTY OF TECUMSEH PRODUCTS, THE INFORMATION HEREIN IS THE PROPERTY OF TECUMSEH PRODUCTS COMPANY. REPRODUCTION AND COMPETITIVE USE PROHIBITED. ALL RIGHTS RESERVED. ALL PARTS OR PARTS LISTED, AND ANY OTHER INFORMATION CONTAINED HEREIN, MAY BE SUBJECT TO EXPORT CONTROL REGULATIONS. THE INFORMATION CONTAINED HEREIN IS PROVIDED FOR INFORMATIONAL PURPOSES ONLY. THE INFORMATION HEREIN IS NOT INTENDED TO BE A WARRANTY, EXPRESS OR IMPLIED, OF PERFORMANCE OR FITNESS FOR A PARTICULAR PURPOSE. TECUMSEH, AND ITS SUCH INFORMATION MAY BE SUBJECT TO CHANGE WITHOUT NOTICE. ALL PRODUCTS SHOULD BE TESTED BY THE USER IN THE ACTUAL APPLICATION. TECUMSEH DOES NOT EXPRESS OR IMPLIED WARRANTY OF ANY KIND, INCLUDING WARRANTIES OF MERCHANTABILITY OR FITNESS FOR A PARTICULAR PURPOSE, OR WARRANTIES OF PRODUCT NON-INFRINGEMENT. TECUMSEH'S SOLE RESPONSIBILITY SHALL BE TO REPAIR OR REPLACE PRODUCTS FOUND TO BE DEFECTIVE IN MATERIAL OR WORKMANSHIP DURING THE WARRANTY PERIOD. IN NO EVENT WILL TECUMSEH BE LIABLE FOR ANY SPECIAL, INCIDENTAL OR CONSEQUENTIAL DAMAGES.

DO NOT SCALE THIS DRAWING. UNLESS OTHERWISE SPECIFIED, MATERIALS MUST NOT BE INSTALLED UNTIL RECEIVED OF A CERTIFIED DRAWING.

NAME: HERMETIC CONDENSING UNIT

SCALE: 1"=2"

PART NO.

TECUMSEH COMPRESSOR CO.
TECUMSEH, MICHIGAN

MATERIAL: NOTED

PART NO.: SU1909-28

3D.VNX4

ENGLISH

O.A. SYMBOLS
✱ = CATEGORY I
▲ = CATEGORY II
■ = CATEGORY III
= CATEGORY IV

AK

BANNER