DWG NO.
SU1896-G103G

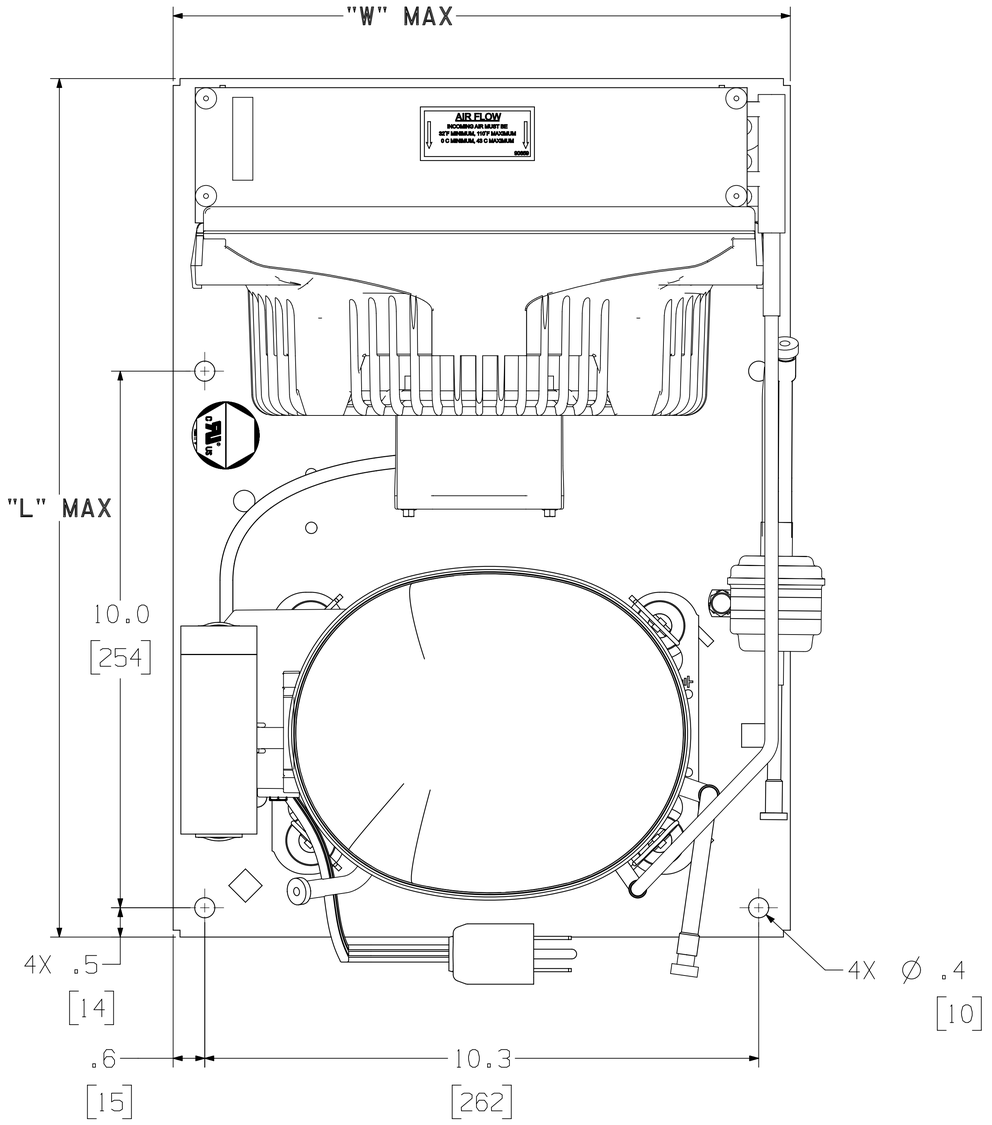

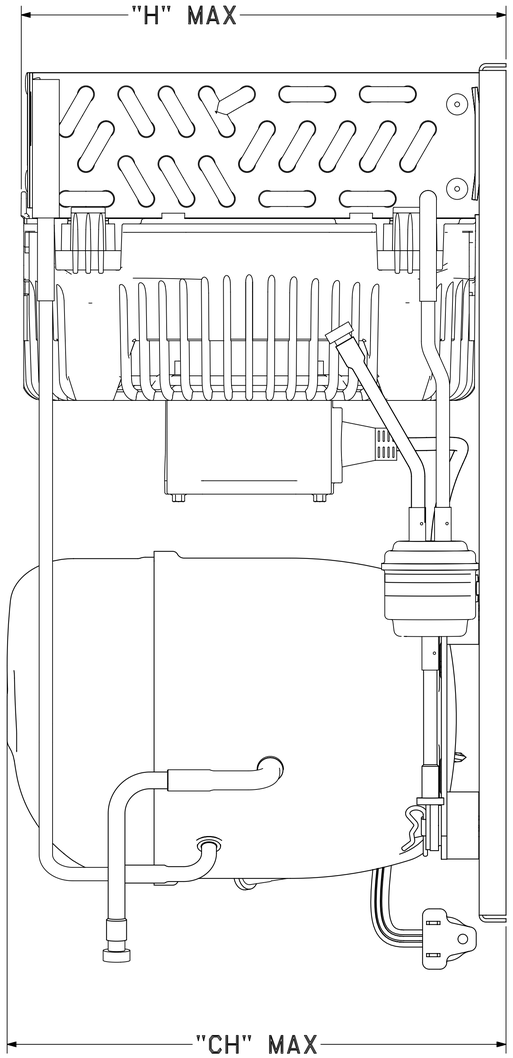

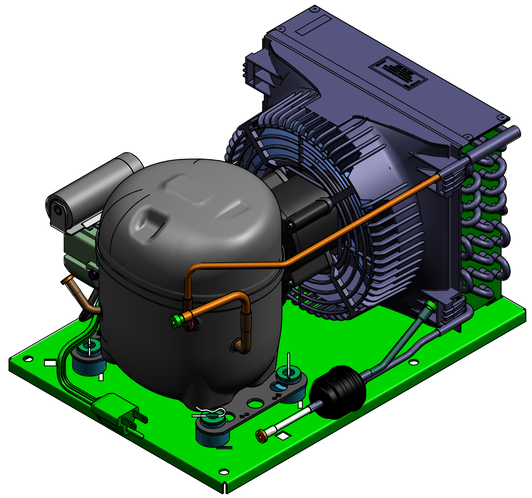

SCALE 3:8

NOTE
DIMENSIONING = INCHES [MILLIMETERS]

"L" MAX	"W" MAX	"H" MAX	"CH" MAX
16.0 [406]	11.5 [292]	9.0 [229]	9.3 [236]

3D,VNX10

ENGLISH

Q.A. SYMBOLS
✱ = CATEGORY I
▲ = CATEGORY II
■ = CATEGORY III
= CATEGORY IV

UNIT

REL	LT	LC	CHANGE	DATE
A	---	---	EC88843 ADDED GROUNDING SCREW 330-10132	RP 11FEB19
			EC87069 ATP	---

DIS.CODE

DESCRIPTION
SALES UNIT DRAWING

SCALE 3:4 & NOTED

THIS PRINT SUPERSEDES ALL PRINTS PRIOR TO

TECUMSEH PRODUCTS CO.
ANN ARBOR, MICHIGAN

MATERIAL
NOTED

DWG NO.
SU1896-G103G