PART NO. SU1920-27

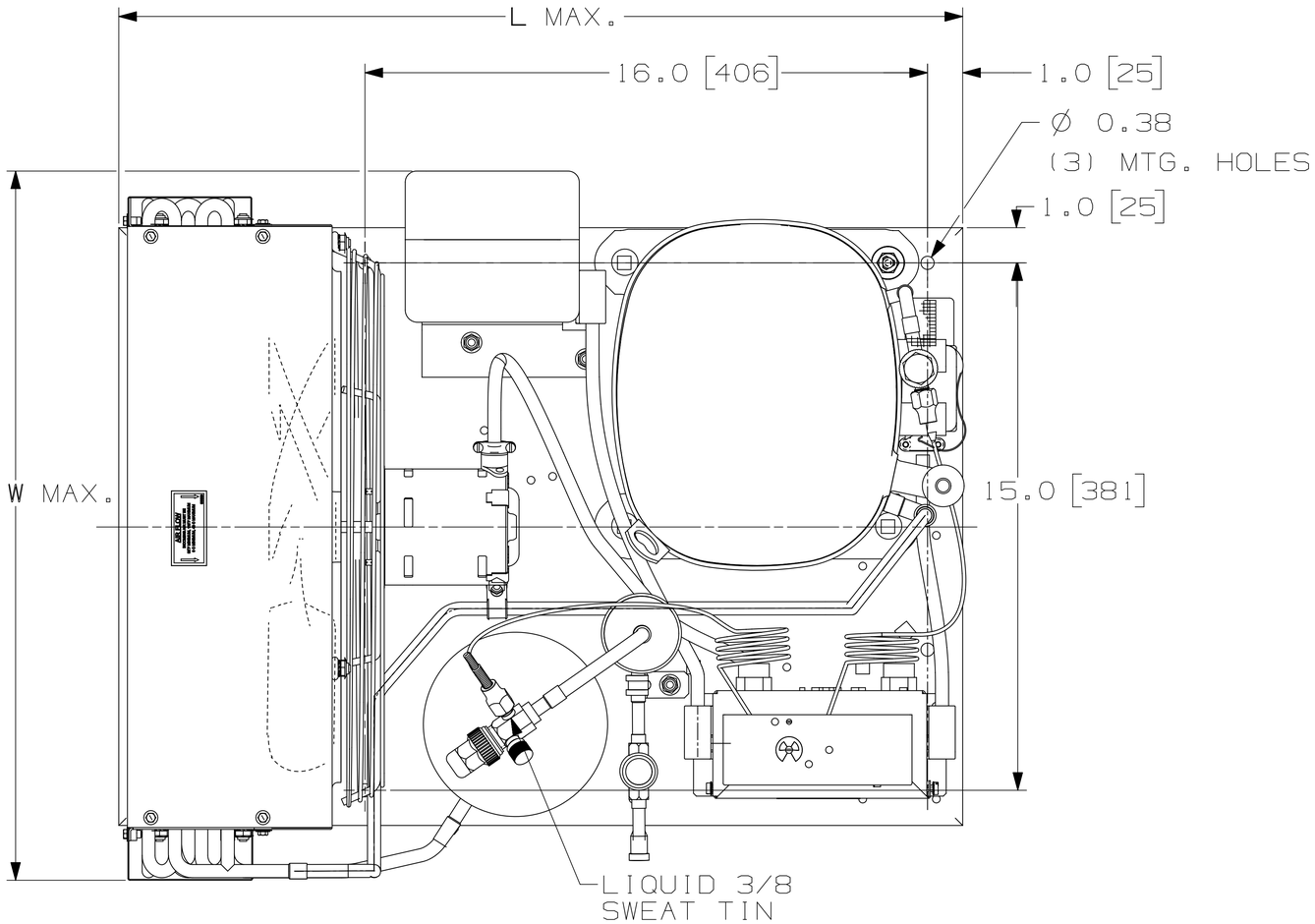

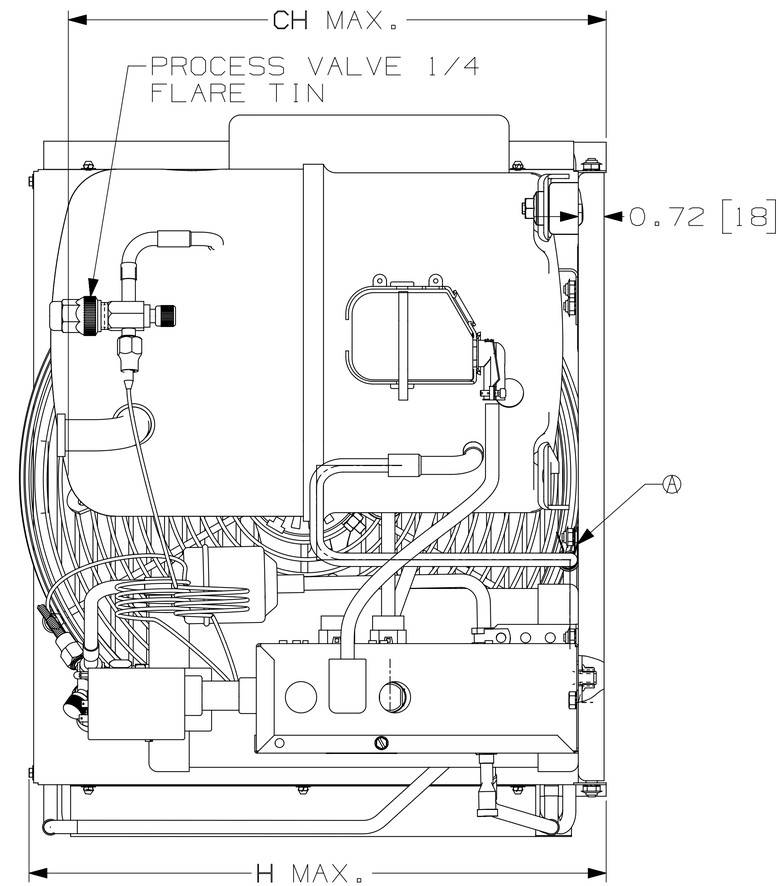

L	W	H	CH
24.0 [610]	20.2 [512]	16.1 [410]	15.5 [394]

NOTE!
DIMENSIONING = INCHES [MILLIMETERS]

3D,VNXB

Q.A. SYMBOLS
★ = CATEGORY I
▲ = CATEGORY II
■ = CATEGORY III
= CATEGORY IV

AV

REL	LT	LC	CHANGE	DATE
B	9A		E257568 PROTECTIVE VALVE PROTECTIVE 90°	TS 09APR14
A	ZE		EC40277 REVISED TUBE SUPPORTS TO MOUNT TO BASEPLATE	N.CLARK 09AUG11
--			EC33081	----

THIS DRAWING OR PRINT FULLY THE PROPRIETARY INFORMATION OF TECUMSEH PRODUCTS COMPANY AND CONTAINS THE PROPERTY OF THE COMPANY. IT IS NOT TO BE REPRODUCED OR DISCLOSED IN WHOLE OR IN PART WITHOUT THE EXPRESSED WRITTEN CONSENT OF TECUMSEH PRODUCTS COMPANY. THIS DRAWING AND ITS INFORMATION TRANSMITTED HEREWITH IS LOANED TO THE RECEIVER FOR MUTUAL ADVANTAGE AND IS SUBJECT TO RECALL AT ANY TIME. THE RECEIVER BY ACCEPTANCE HEREOF AGREES TO USE THIS INFORMATION AND DRAWING ONLY FOR THE PURPOSE FOR WHICH IT IS LOANED. IT IS ACCEPTED WITH THE UNDERSTANDING THAT IT IS TO BE KEPT CONFIDENTIAL AND NOT TO BE DISCLOSED TO ANY OTHER PERSON OR ORGANIZATION WITHOUT THE WRITTEN CONSENT OF TECUMSEH PRODUCTS COMPANY. THE RECEIVER AGREES TO RETURN THE DRAWING UPON REQUEST.

DIS.CODE --

NAME HERMETIC CONDENSING UNIT

SCALE 1:2

THIS PRINT SUPERSEDES ALL PRINTS PRIOR TO

DO NOT SCALE THIS DRAWING. MATERIAL MUST BE WITHIN .005 OF PRINT. REMOVE ALL BURRS. CORNERS MODERATELY SHARP.

TECUMSEH PRODUCTS CO.
ANN ARBOR, MICHIGAN

MATERIAL NOTED

PART NO. SU1920-27