| ITEM | PART NUMBER |
|---|---|
| A | 320-10147 |
| B | 14963285 |
| C | 14947663 |
| D | 580-10244 |
| E | 14963571 |

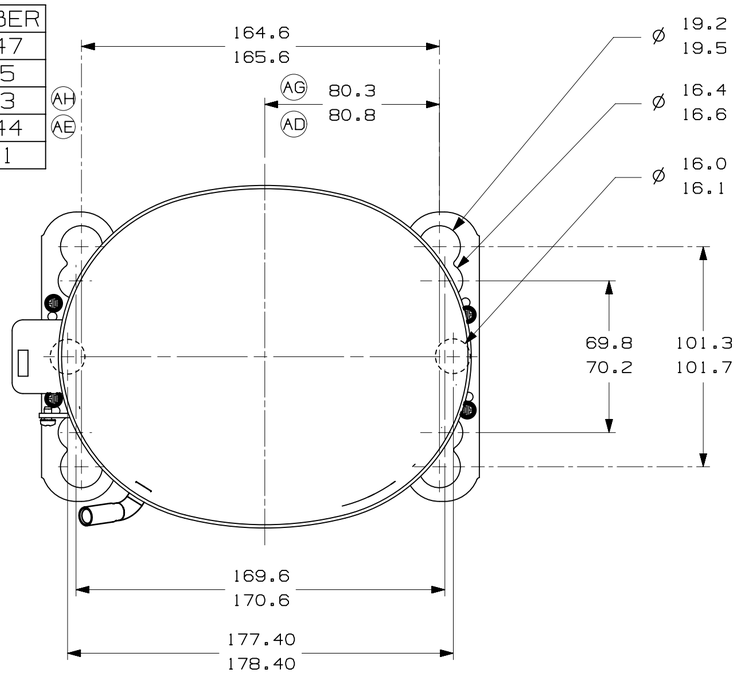


-AUXILIARY VIEW-
FASTENING DIMENSIONS

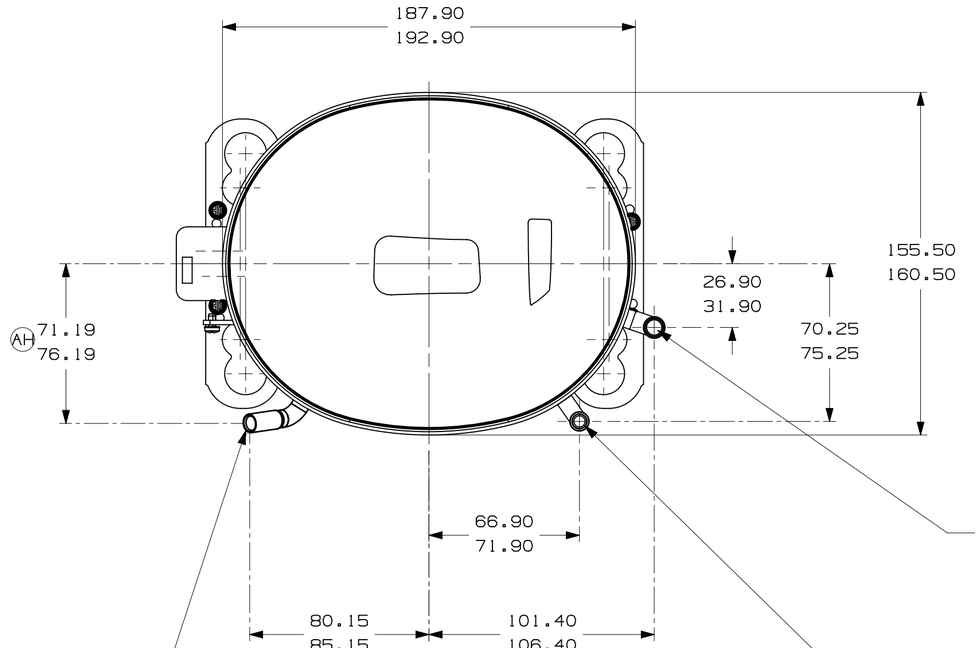


E-(COPPER) SUCTION TUBE
GAGE I.D. TO 8.00-8.10
× 15.00-17.00 DEEP.

C-(COPPER) PROCESS TUBE
GAGE I.D. TO 6.45-6.55
× 15.00-17.00 DEEP.

D-(COPPER) DISCHARGE TUBE
GAGE I.D. TO 6.45-6.55
× 15.00-17.00 DEEP.

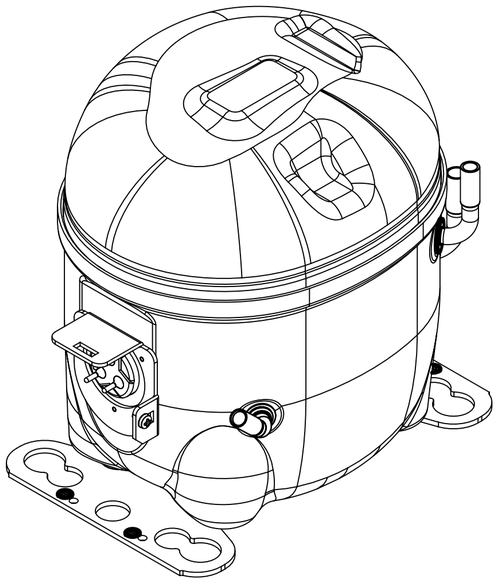

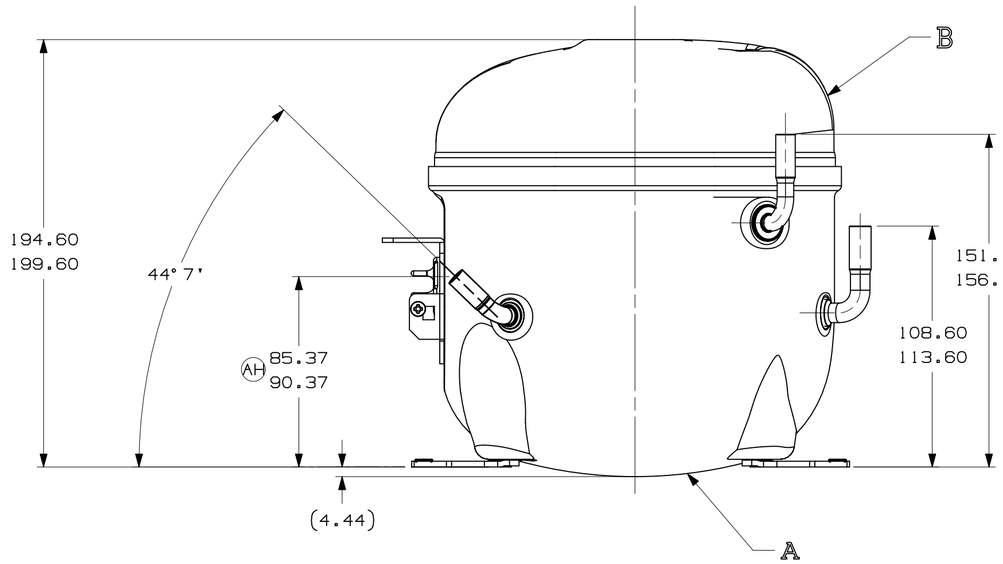


NOTES:
1- IF SPECIFIED IN BM. ASSEMBLE PARTS AS SHOWN.
2- SEE SPEC. "A-B" & A-C FOR PROCESS.
AB 3- THERE CAN BE NO CREASES IN THE TUBES. (CREASES ARE SIGNS OR MARKS THAT ARE IN SOMETHING THAT BENDS)
4- AFTER THE FOLDS IN THE TUBES, CANNOT BE ACCELERATED TO AREA EXCEEDING 30%.
AC 5- TUBES OF SUCTION, DISCHARGE AND PROCESS MUST BE FREE OF INK ON 15.8mm (5/8") FROM TOP OF THE TUBES AS SPEC. T.P.Co. A-B4.
AG 6- FOR SUPPLIER ENVIRONMENTAL REGULATORY REQUIREMENTS, SEE TECUMSEH GLOBAL SPEC. 08.

| | | | | | | | | | | | | | | | | | |
|---|---|---|---|---|---|---|---|---|---|---|---|---|---|---|---|---|---|
| | EC102387 02-05-22 GM. RG. | | | EC80775 14-02-18 PS. RG. | EC70368 06-06-16 AMP. WC. | EC59887 03-03-15 PS. RG. | EC48188 31-01-14 PS. RG. | EC52840 AMP MF 13-09-13 | EC44035 08/06/12 PS. A.M | | EC40829 28/09/11 J.B / A.M | DATE |
| | ERA 91.60-96.60 | ERA 86.60-91.60 | ERA 72.10-77.10 | ERA 14963573 | ALTERDA MEDIDA ERA:122.30-122.80 E ACRESC. NOTA 6 | RETIRADO DETALHE (AREA ISENTA DE PINTURA) | ALTERADO TUBO D ERA: 14963519 | ALTERADA MEDIDA ERA:80.30-80.80 | ADICIONADO NOTA | REVISADA NOTAS 3 E 4 | ACRESCENTADA NOTAS 3 E 4 | LIBERACAO | CHANGE |
| | B5 | D4 | E5 | F8 | A/3 F/7 | -- | AE F/8 | AD F/7 | AC A/2 | A/2 | A/2 | | LC |
| | AH | | | | AG | AF | AE | AD | AC | AB | | AA | LT |

THIS DRAWING OR PRINT (I) IS THE PROPERTY OF TECUMSEH DO BRASIL LTDA. AND CONTAINS PROPRIETARY AND CONFIDENTIAL INFORMATION BELONGING TO TECUMSEH DO BRASIL, (II) IS MADE AVAILABLE TO THE RECIPIENT ON THE EXPRESS AND SPECIFIC CONDITION THAT NEITHER IT NOR THE INFORMATION CONTAINED THEREON OR DISCLOSED OR MADE AVAILABLE TO OTHERS WITHOUT THE EXPRESS AND SPECIFIC WRITTEN CONSENT OF TECUMSEH DO BRASIL AND THAT SUCH INFORMATION ONLY AS EXPRESSLY AND SPECIFICALLY APPROVED IN WRITING BY TECUMSEH DO BRASIL AND NOT OTHERWISE.(III) SHALL NOT BE COPIED OR TO ANY EXTENT WITHOUT TECUMSEH DO BRASIL PRIOR EXPRESS AND SPECIFIC WRITTEN CONSENT AND (IV) SHALL BE RETURNED TO THE RECIPIENT UPON REGUEST PROMPTLY AFTER SUCH REGUEST IS MADE.

DO NOT SCALE THIS DRAWING. ALL FERROUS MATERIALS MUST NOT BE MAGNETIZED AS RECEIVED OR AT COMPRESSOR ASSEMBLY

THIRD ANGLE PROJECTION

UNITS: mm

DRAWING SIZE: A2

O. A.SYMBOLS AS PROCEDURE 2.01.031 TECUMSEH OF BRAZIL

: CATEGORY I
: CATEGORY II
: CATEGORY III
: CATEGORY IV

Tecumseh®

| NAME | PART NO. |
|---|---|
| SALES COMPRESSOR | DCAE212 |
| | SCALE 1:2 / PAGE 1/1 |
| DATE 12/09/11 | REF. |
| | FAMILY AE2 |