ITEM	PART NUMBER
A	320-10688
B	14963286
C	14947663
D	580-10244
E	580-10019

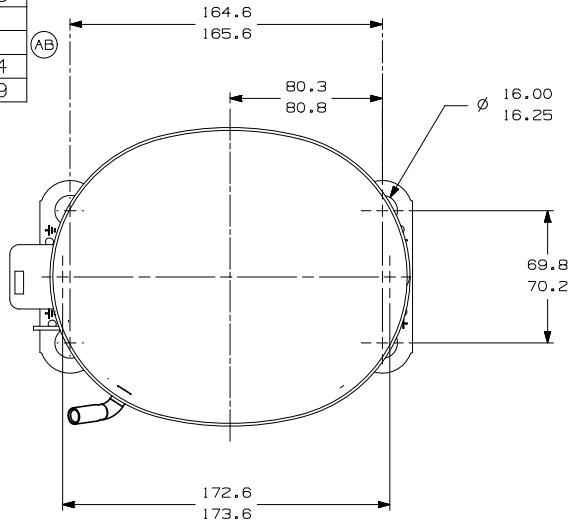

-AUXILIARY VIEW-
FASTENING DIMENSIONS

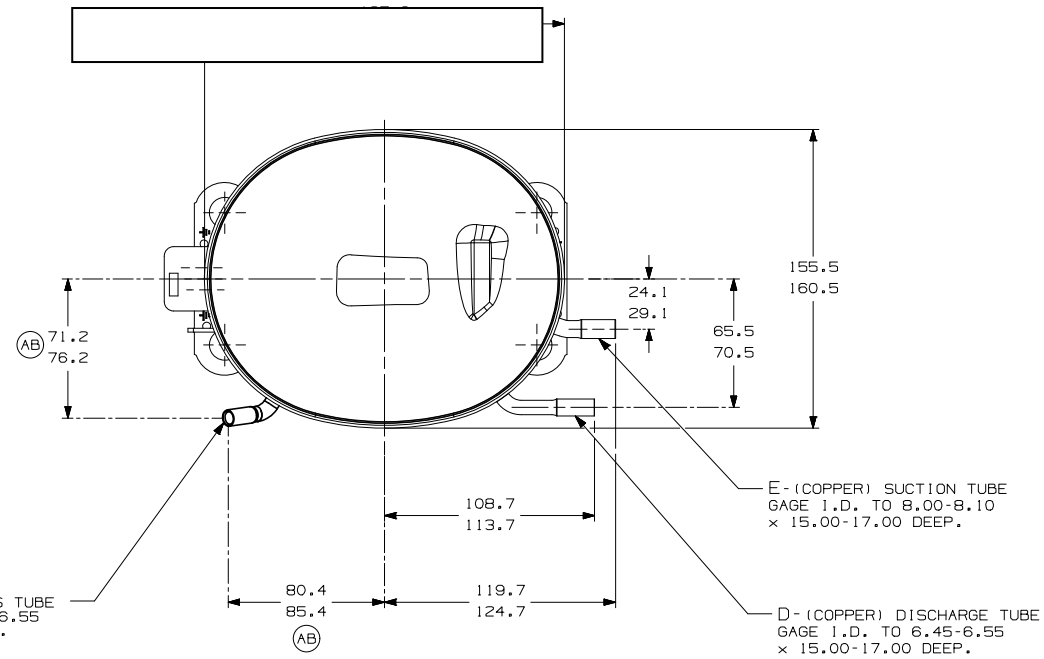

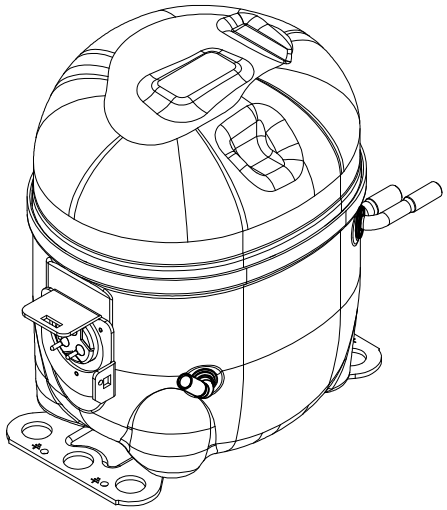

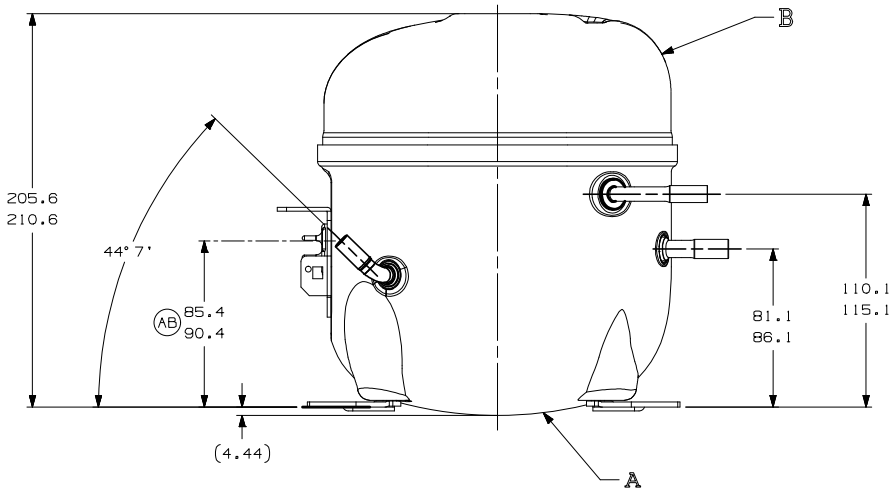

NOTES:
1- IF SPECIFIED IN BM. ASSEMBLE PARTS AS SHOWN.
2- SEE SPEC. "A-B" & A-C FOR PROCESS.
3- THERE CAN BE NO CREASES IN THE TUBES. (CREASES ARE SIGNS OR MARKS THAT ARE IN SOMETHING THAT BENDS)
4- AFTER THE FOLDS IN THE TUBES, CANNOT BE ACCELERATED TO AREA EXCEEDING 30%.
5- TUBES OF SUCTION, DISCHARGE AND PROCESS MUST BE FREE OF INK ON 15.8mm (5/8") FROM TOP OF THE TUBES AS SPEC. TECUMSEH A-B4.
6- FOR SUPPLIER ENVIRONMENTAL REGULATORY REQUIREMENTS, SEE TECUMSEH GLOBAL SPEC. 08.

		EC102387 03-05-22 GW. RG.	EC98174 30-11-20 PS. RG.			
		ERA 91.60-96.60	ERA 86.60-91.60	ERA 72.10-77.10	ERA 14963573	LIBERACAO
B5	D4	E5	F8			
AB					AA	

LT	LC	CHANGE	DATE

THIS DRAWING OR PRINT (I) IS THE PROPERTY OF TECUMSEH DO BRASIL LTDA., AND CONTAINS PROPRIETARY AND CONFIDENTIAL INFORMATION BELONGING TO TECUMSEH DO BRASIL. (II) IS LOANED AND ACCEPTED BY THE RECEIVER SUBJECT TO THE EXPRESS CONDITION THAT NEITHER IT NOR THE INFORMATION CONTAINED THEREIN OR DISCLOSED OR MADE AVAILABLE TO OTHERS SHALL BE CHANGED WITHOUT THE WRITTEN CONSENT OF TECUMSEH DO BRASIL AND THAT SUCH INFORMATION ONLY AS EXPRESSLY AND SPECIFICALLY APPROVED IN WRITING BY TECUMSEH DO BRASIL SHALL BE USED FOR ANY PURPOSE. (III) SHALL NOT BE COPIED OR TO ANY EXTENT WITHOUT TECUMSEH DO BRASIL PRIOR EXPRESS AND SPECIFIC WRITTEN CONSENT AND (IV) SHALL BE RETURNED TO TECUMSEH DO BRASIL UPON WRITTEN REQUEST PROMPTLY AFTER SUCH REQUEST IS MADE.

DO NOT SCALE THIS DRAWING. ALL FEATURES MUST BE VERIFIED AGAINST PART AS RECEIVED ON AT COMPRESSOR ASSEMBLY

THIRD ANGLE PROJECTION
UNITS: mm
DRAWING SIZE: A2

Q. A.SYMBOLS AS PROCEDURE 2.01.031 TECUMSEH OF BRAZIL
★ : CATEGORY I
▲ : CATEGORY II
■ : CATEGORY III
: CATEGORY IV

tecumseh

NAME	PART NO.
SALES COMPRESSOR	DCAE708

DWN.	CK.	APR.	SCALE	PAGE
PAULO	RAMIRO	ANDRE	1:2	1/1
DATE 19-10-20	REF. -		FAMILY AE2	