PART NO.
DCAE-113

	DIM. W	DIM. X	DIM. Y
WITH 3.875(98.4) LONG CAPACITOR	1.453-1.703 / 36.9-43.3	4.078-4.141 / 103.6-105.2	———
WITH 1.438(36.5) DIA. CAPACITOR	———	———	1.969-2.031 / 50.0-51.6
WITH 4.875(123.8) LONG CAPACITOR	1.953-2.203 / 49.6-56.0	5.078-5.141 / 129.0-130.6	———
WITH 1.813(46.1) DIA. CAPACITOR	———	———	2.344-2.406 / 59.5-61.1

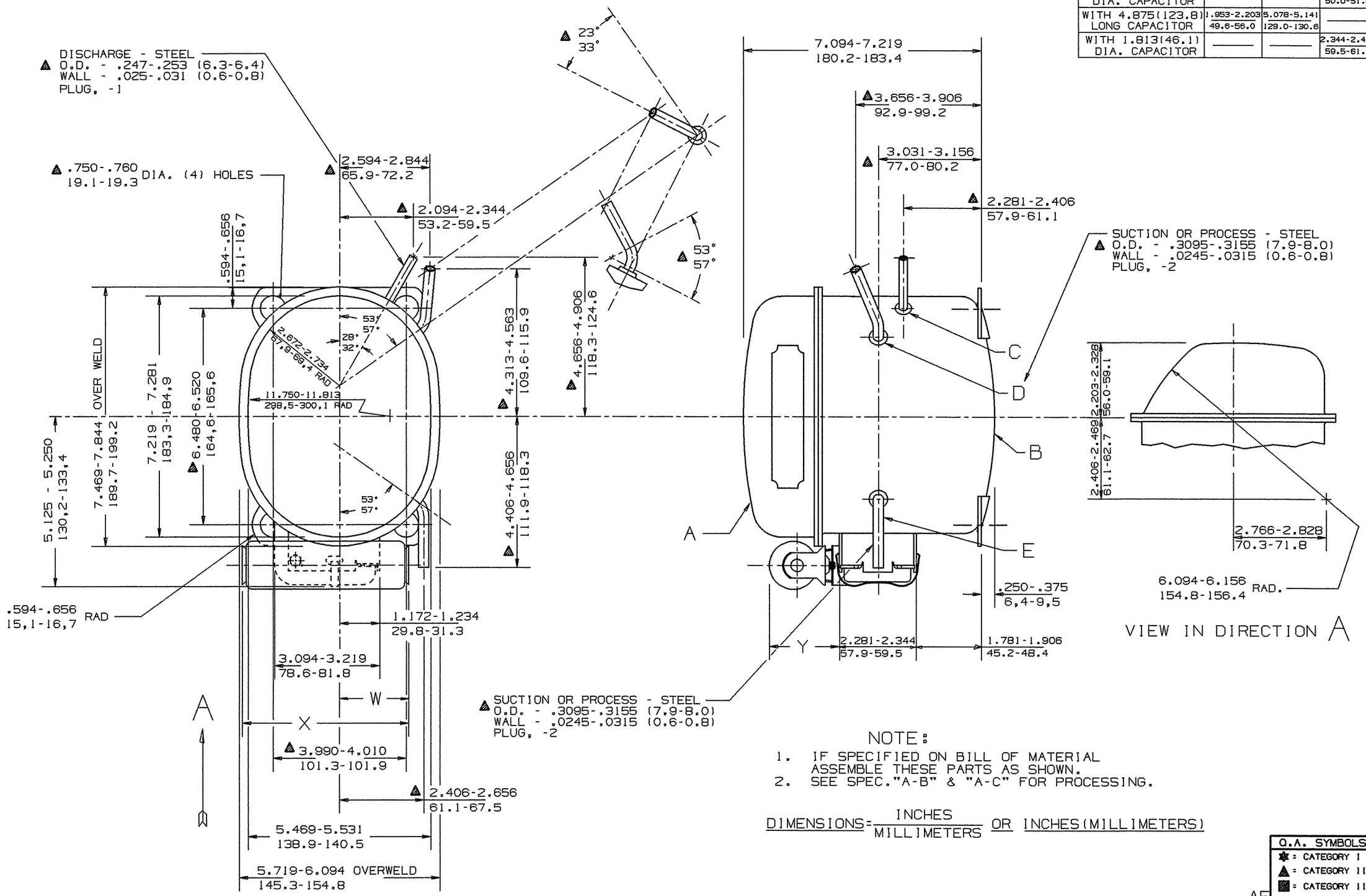

NOTE:
1. IF SPECIFIED ON BILL OF MATERIAL ASSEMBLE THESE PARTS AS SHOWN.
2. SEE SPEC."A-B" & "A-C" FOR PROCESSING.

DIMENSIONS = INCHES / MILLIMETERS OR INCHES(MILLIMETERS)

Q.A. SYMBOLS
✱ = CATEGORY I
▲ = CATEGORY II
▨ = CATEGORY III
= CATEGORY IV

AE

A	32085	HB 10/10/88	HB 5-9-86	DATE	
B	HA531	Q.A. SYMBOLS & CHART ADDED #220704	REDRAWN NO CHANGE #212377	CHANGE	
C	34318				
D	34317				
E	34317				
		M —	L -	LT LC	

THIS DRAWING OR PRINT (I) IS THE PROPERTY OF TECUMSEH PRODUCTS COMPANY AND CONTAINS PROPRIETARY AND CONFIDENTIAL INFORMATION BELONGING TO TECUMSEH. RECIPIENT ON THE EXPRESS AND IMPLIED CONDITION THAT RECIPIENT WILL NOT DISCLOSE OR DISCLOSE THERE IN SMALL BE MADE AVAILABLE TO ANY OTHERS WITHOUT THE EXPRESS AND SPECIFIC WRITTEN CONSENT OF TECUMSEH AND THAT SUCH INFORMATION ONLY WILL BE EXPRESSLY AND SPECIFICALLY DISCLOSED TO THOSE OF RECIPIENT'S AND NOT OTHERWISE (III) SHALL NOT BE COPIED OR REPRODUCED IN ANY MANNER OR TO ANY EXTENT WITHOUT TECUMSEH'S PRIOR EXPRESS AND WRITTEN CONSENT (IV) SHALL BE RETURNED BY THE RECIPIENT TECUMSEH IS REQUEST, PROMPTLY AFTER LATTER'S REQUEST IS MADE.

DIS. CODE 34D

DO NOT SCALE THIS DRAWING. ALL FERROUS MATERIALS MUST NOT BE MAGNETIZED AS PER ASTM SPEC. OR AT PROCESS OR ASSEMBLY.

NAME: SALES COMPRESSOR

SCALE 1"=2"

THIS PRINT SUPERSEDES ALL PRINTS PRIOR TO

TECUMSEH PRODUCTS CO.
TECUMSEH, MICHIGAN

MATERIAL: NOTED

INTERNAL USE ONLY
©UGII\DISK1:BRODERICK:AE-DCAE-113.REVM.PRT

PART NO. DCAE-113