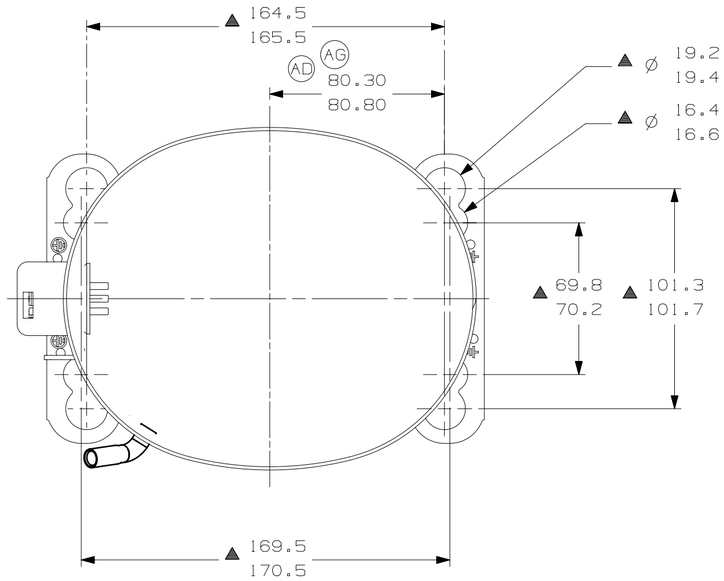

-AUXILIARY VIEW-
FASTENING DIMENSIONS

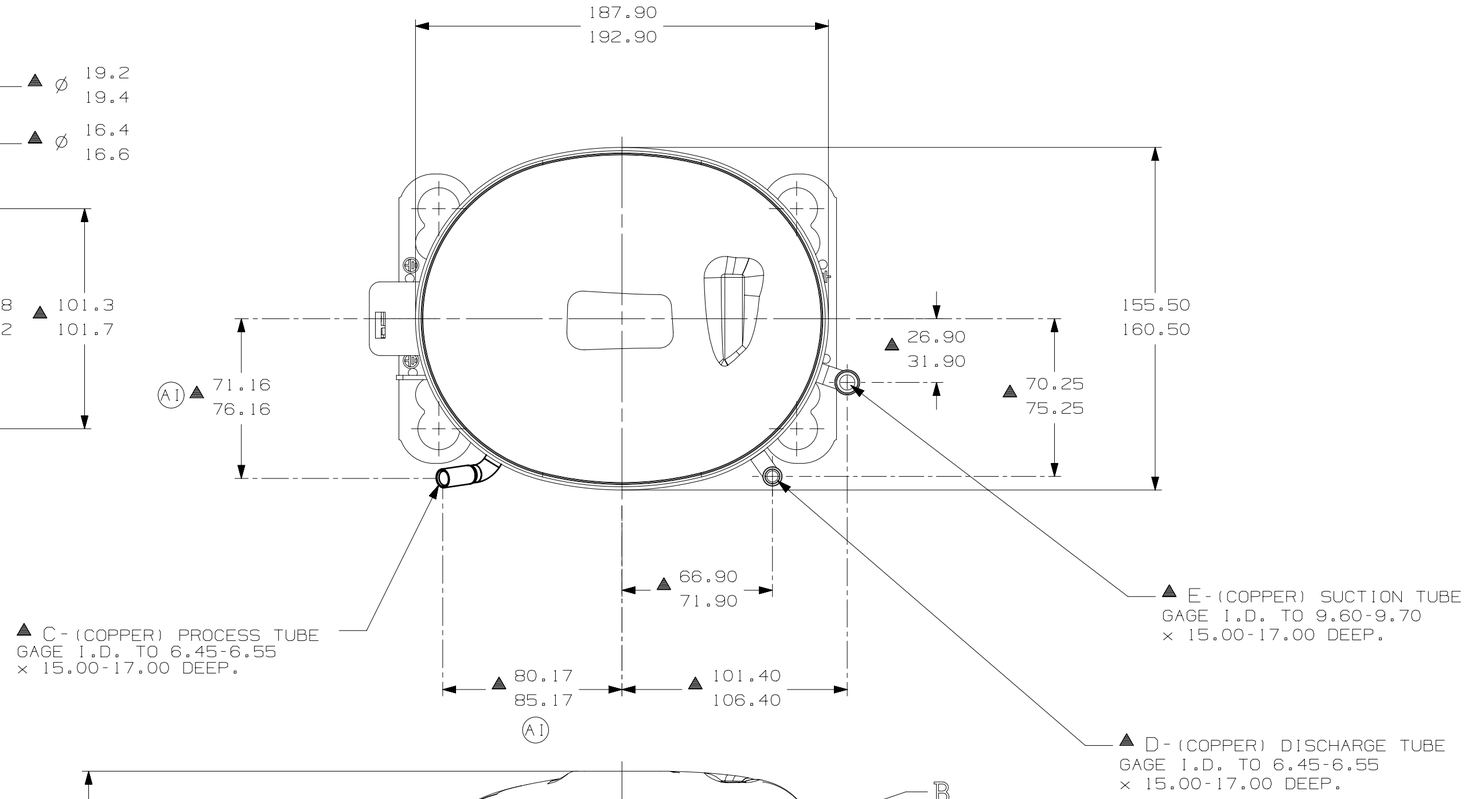

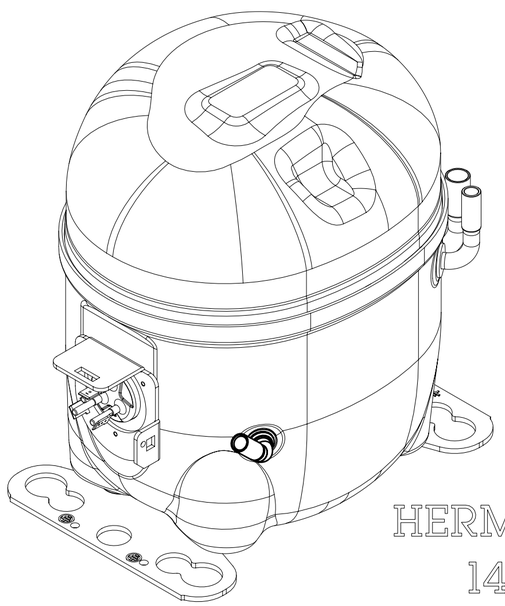

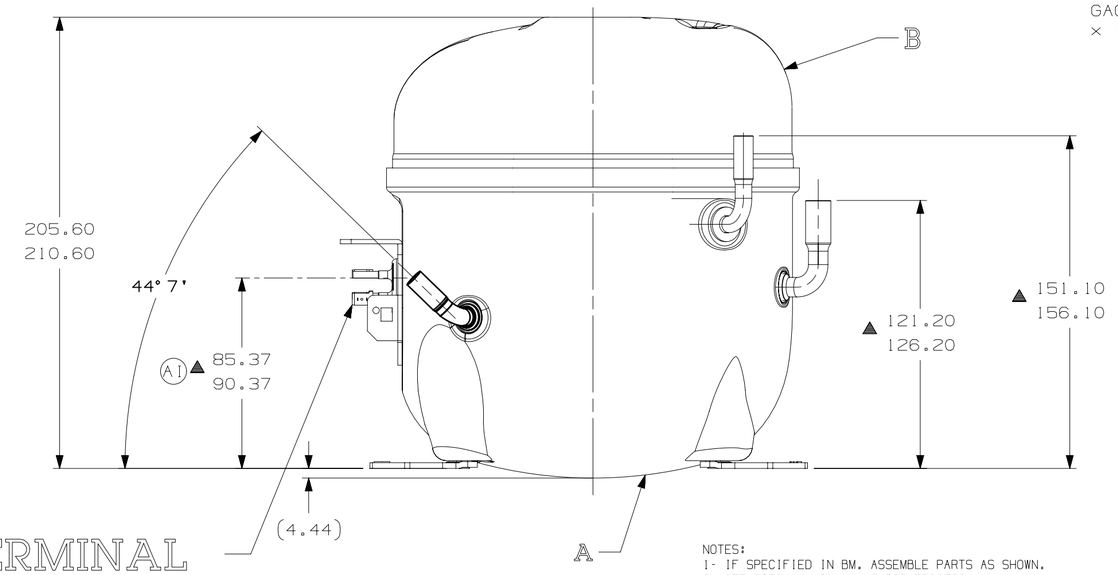

AH

HERMETIC TERMINAL
14945645 WITH
SPADE TERMINALS

NOTES:
1- IF SPECIFIED IN BM. ASSEMBLE PARTS AS SHOWN.
2- SEE SPEC. "A-B" & A-C FOR PROCESS.
3- FOR SUPPLIER ENVIRONMENTAL REGULATORY REQUIREMENTS, SEE TECUMSEH GLOBAL SPEC. 08.
AB 4- THERE CAN BE NO CREASES IN THE TUBES. (CREASES ARE SIGNS OR MARKS THAT ARE IN SOMETHING THAT BENDS)
5- AFTER THE FOLDS IN THE TUBES, CANNOT BE ACCELERATED TO AREA EXCEEDING 30%.
AC 6- TUBES OF SUCTION, DISCHARGE AND PROCESS MUST BE FREE OF INK ON 15.8mm (5/8") FROM TOP OF THE TUBES AS SPEC. T.P.Co. A-B4.

ITEM	PART NUMBER
A	320-10181
B	14963286
AI C	14947663
AE D	580-10244
E	14963572

				EC102387 03-05-22 GM. RG.		EC96671 13-08-20 CADEM CS	EC80775 14-02-18 PS. RG.	EC70368 06-06-16 AMP. WC.	EC59687 03-03-15 PS. RG.	EC48188 31-01-14 PS. RG.	EC52840 AMP MF 13/09/13	EC44035 08/06/12 PS. A.M		EC43117 30/12/11 AMP / A.M	DATE
				ERA 91.60-96.60	ERA 86.60-91.60	ERA 72.10-77.10	ERA 14963573	ATUALIZADA NOTA DE AVISO	ALTERADA MEDIDA ERA: 82.30-82.80	RETIRADO DETALHE (AREA ISENTA DE PINTURA)	ALTERADO TUBO D ERA: 14963519	ALTERADA MEDIDA ERA:80.30-80.80	ADICIONADO NOTA	REVISADA NOTAS 4 E 5	ACRESCENTADA NOTAS 4 E 5	LIBERACAO	CHANGE
				B5	D4	E5	B1	B/6	F/7	- -	A/1	F/7	A/4	A/4	A/4		LC
				A1				AH	AG	AF	AE	AD	AC	AB		AA	LT

THIS DRAWING OR PRINT (I) IS THE PROPERTY OF TECUMSEH DO BRASIL LTDA. AND CONTAINS PROPRIETARY AND CONFIDENTIAL INFORMATION BELONGING TO TECUMSEH DO BRASIL. (II) IS MADE AVAILABLE TO THE RECIPIENT ON THE EXPRESS AND SPECIFIC CONDITION THAT NEITHER IT NOR THE INFORMATION CONTAINED THEREON OR DISCLOSED OR MADE AVAILABLE TO OTHERS WITHOUT THE EXPRESS AND SPECIFIC WRITTEN CONSENT OF TECUMSEH DO BRASIL AND THAT SUCH INFORMATION ONLY AS EXPRESSLY AND SPECIFICALLY APPROVED IN WRITING BY TECUMSEH DO BRASIL AND NOT OTHERWISE. (III) SHALL NOT BE COPIED OR TO ANY EXTENT WITHOUT TECUMSEH DO BRASIL PRIOR EXPRESS AND SPECIFIC WRITTEN CONSENT AND (IV) SHALL BE RETURNED TO THE RECIPIENT AT THEIR REQUEST PROMPTLY AFTER SUCH REQUEST IS MADE.

DO NOT SCALE THIS DRAWING. ALL FERROUS MATERIALS MUST NOT BE MAGNETIZED AS RECEIVED OR AT COMPRESSOR ASSEMBLY

THIRD ANGLE PROJECTION
UNITS: mm
DRAWING SIZE: A2
Q. A.SYMBOLS AS PROCEDURE 2.01.031 TECUMSEH OF BRAZIL
✱ : CATEGORY I
▲ : CATEGORY II
■ : CATEGORY III
: CATEGORY IV

Tecumseh

NAME	PART NO.
SALES COMPRESSOR	DCAE677
DATE 23/12/11	REF.
SCALE 1:2	PAGE 1/1
FAMILY AE2	