PART NO. DCAE277

	DIM. W	DIM. X	DIM. Y
WITH 3.875(98.4) LONG CAPACITOR	1.453-1.703 / 36.9-43.3	4.078-4.141 / 103.6-105.2	———
WITH 1.438(36.5) DIA. CAPACITOR	———	———	1.989-2.031 / 50.0-51.6
WITH 4.875(123.8) LONG CAPACITOR	1.953-2.203 / 49.6-56.0	5.078-5.141 / 129.0-130.6	———
WITH 1.813(46.1) DIA. CAPACITOR	———	———	2.344-2.406 / 59.5-61.1

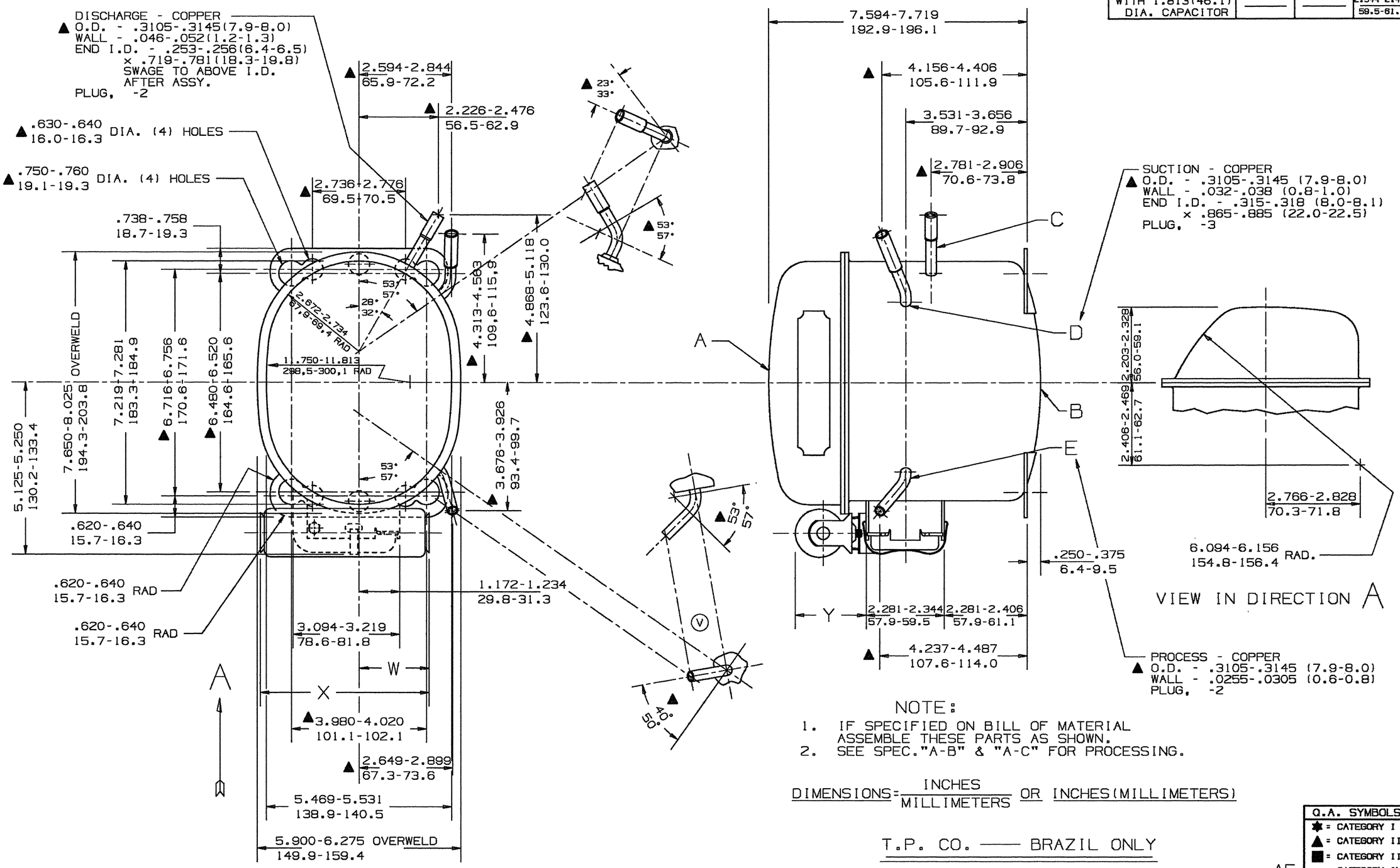

NOTE:

1. IF SPECIFIED ON BILL OF MATERIAL ASSEMBLE THESE PARTS AS SHOWN.
2. SEE SPEC."A-B" & "A-C" FOR PROCESSING.

DIMENSIONS = INCHES / MILLIMETERS OR INCHES(MILLIMETERS)

T.P. CO. —— BRAZIL ONLY

Q.A. SYMBOLS
✱ = CATEGORY I
▲ = CATEGORY II
■ = CATEGORY III
= CATEGORY IV

AE

LT	LC	CHANGE	DATE
A	32134	RE-RELEASED FROM DBS. FILE #228999	HMB 12/18/93
B	HA625-2	MTG. FOOT REVISED #215641	HB 3/8/91
C	34461	Q.A. SYMBOLS & CHART ADDED #220704	HB 10/20/89
D	34360	PROC. TUBE ROTATED 45° #214387	HB 11-12-86
E	34690	REDRAWN NO CHANGE #212377	HB 11-12-86

THIS DRAWING OR PRINT (1) IS THE PROPERTY OF TECUMSEH PRODUCTS COMPANY (TECUMSEH) AND CONTAINS INFORMATION PROPRIETARY TO TECUMSEH, INFORMATION BELONGING TO TECUMSEH, RECIPIENT HEREBY AGREES TO NOT REPRODUCE, DISCLOSE OR USE SPECIFIC CONDITION THAT NEITHER IT THEREON, OR DISCLOSED THEREIN SHALL BE USED OR DISCLOSED TO THIRD PARTIES AND SPECIFIC WRITTEN CONSENT OF TECUMSEH. (2) THE INFORMATION ONLY AS EXPRESSLY AND SPECIFICALLY AUTHORIZED IN WRITING BY TECUMSEH. (3) THIS DRAWING OR PRINT IS NOT TO BE COPIED OR DUPLICATED IN ANY MANNER OR FORM WHATSOEVER WITHOUT TECUMSEH'S PRIOR EXPRESS AND SPECIFIC WRITTEN CONSENT AND IF SUCH IS MADE, THIS DRAWING OR PRINT THEREOF TO TECUMSEH AT THE ADDRESS BELOW MUST BE PROMPTLY AFTER SUCH REQUEST IS MADE.

DIS.CODE 34P

DO NOT SCALE THIS DRAWING ALL FERROUS MATERIAL MUST NOT BE MAGNETIZED AS RECEIVED OR AT COMPRESSOR ASSEMBLY.

NAME SALES COMPRESSOR

SCALE 1"=2"

THIS PRINT SUPERSEDES ALL PRINTS PRIOR TO

TECUMSEH PRODUCTS CO.
TECUMSEH, MICHIGAN

MATERIAL NOTED

INTERNAL USE ONLY
UG@DISK5:[BRODERICK]AE-DCAE277[]Y-C.PRT

PART NO. DCAE277