PART NO.
DCAE944

	DIM. W	DIM. X	DIM. Y
WITH 3.875(98.4) LONG CAPACITOR	1.453-1.703 / 36.9-43.3	4.078-4.141 / 103.6-105.2	———
WITH 1.438(36.5) DIA. CAPACITOR	———	———	1.969-2.031 / 50.0-51.6
WITH 4.875(123.8) LONG CAPACITOR	1.953-2.203 / 49.6-56.0	5.078-5.141 / 129.0-130.6	———
WITH 1.813(46.1) DIA. CAPACITOR	———	———	2.344-2.406 / 59.5-61.1

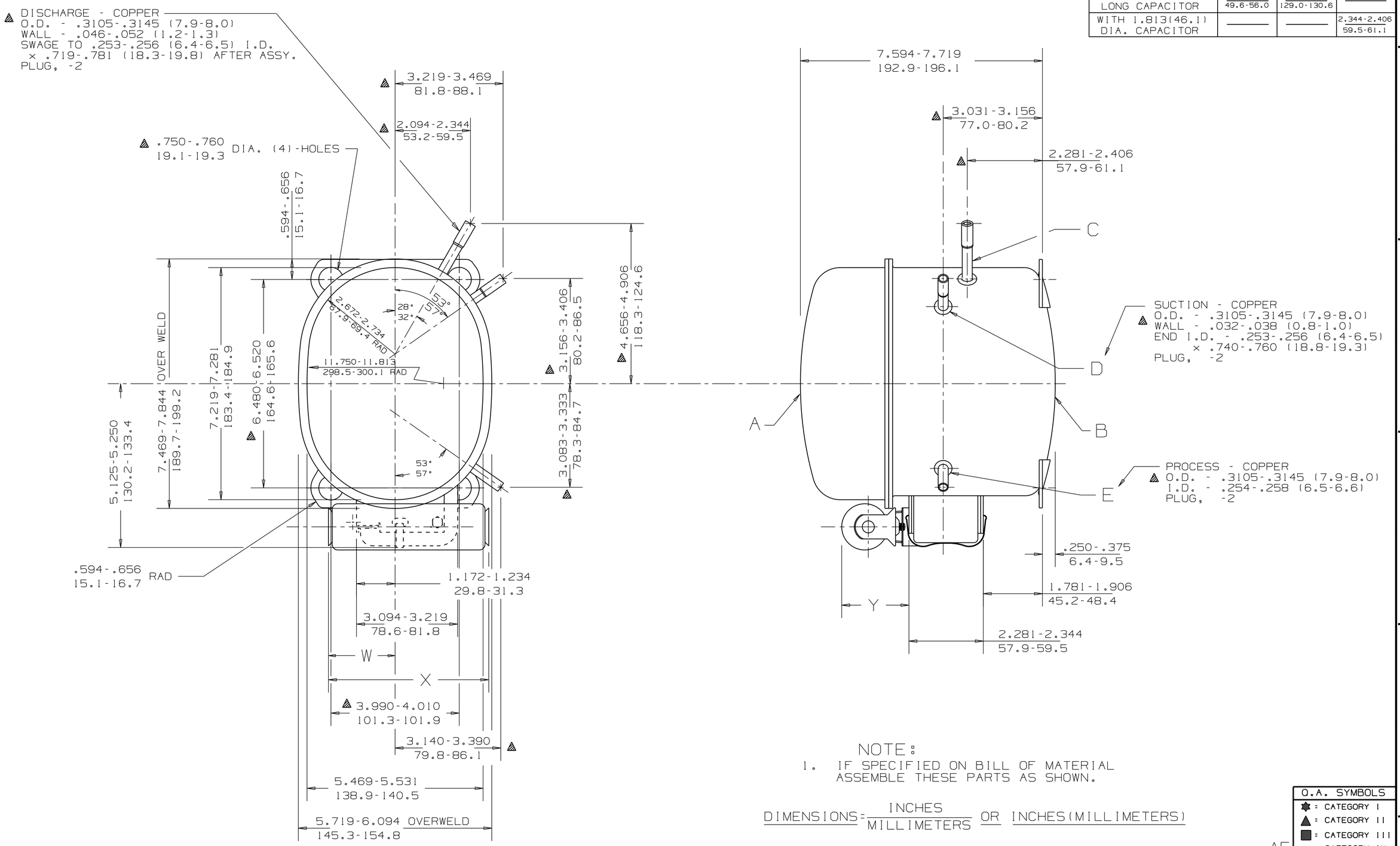

NOTE:

1. IF SPECIFIED ON BILL OF MATERIAL ASSEMBLE THESE PARTS AS SHOWN.

DIMENSIONS = INCHES / MILLIMETERS OR INCHES (MILLIMETERS)

Q.A. SYMBOLS
✱ = CATEGORY I
▲ = CATEGORY II
■ = CATEGORY III
= CATEGORY IV

AE

A	32095			T.M.G 29MAR07	—
B	HA531-29			EC4192 WAS 34529	#229488-1
C	BR34529-2			6A	REL
D	34135			A	LT LC
E	58073-5				

Ⓐ

THIS DRAWING OR PRINT (I) IS THE COMPANY'S (TECUMSEH PRODUCTS COMPANY) EXCLUSIVE PROPERTY AND CONFIDENTIAL, (II) IS MADE AVAILABLE TO TECUMSEH, (III) IS MADE AVAILABLE TO THE RECIPIENT ON THE EXPRESS AND SPECIFIC CONDITION THAT NEITHER IT NOR THE INFORMATION CONTAINED THEREIN SHALL BE DISCLOSED OR MADE AVAILABLE TO OTHERS WITHOUT THE EXPRESS AND SPECIFIC WRITTEN CONSENT OF TECUMSEH AND THAT SUCH INFORMATION SHALL BE USED ONLY (I) SMALL AS APPROVED IN WRITING BY TECUMSEH AND NOT OTHERWISE, (II) SMALL MANNER OR TO AND EXTENT WITHOUT REGARD TO PATENTS, AND (IV) SPECIFIC WRITTEN CONSENT AND (IV) SHALL BE RETURNED BY THE RECIPIENT LATTER'S REQUEST PROMPTLY AFTER SUCH REQUEST IS MADE.

DIS.CODE

DRAWING SCALE
DRAWING CONTAINS FERROUS MATERIALS MUST NOT BE MAGNETIZED AS REQUIRED FOR AN ASSEMBLY OR COMPRESSOR ASSEMBLY.

NAME
SALES COMPRESSOR

SCALE
1"=2"

THIS PRINT SUPERSEDES ALL PRINTS PRIOR TO

TECUMSEH PRODUCTS CO.
TECUMSEH, MICHIGAN

MATERIAL
NOTED

PART NO.
DCAE944