PART NO.
DCAE668

	DIM. W	DIM. X	DIM. Y
WITH 3.875(98.4) LONG CAPACITOR	1.453-1.703 / 36.9-43.3	4.078-4.141 / 103.6-105.2	———
WITH 1.438(36.5) DIA. CAPACITOR	———	———	1.969-2.031 / 50.0-51.6
WITH 4.875(123.8) LONG CAPACITOR	1.953-2.203 / 49.6-56.0	5.078-5.141 / 129.0-130.6	———
WITH 1.813(46.1) DIA. CAPACITOR	———	———	2.344-2.406 / 59.5-61.1

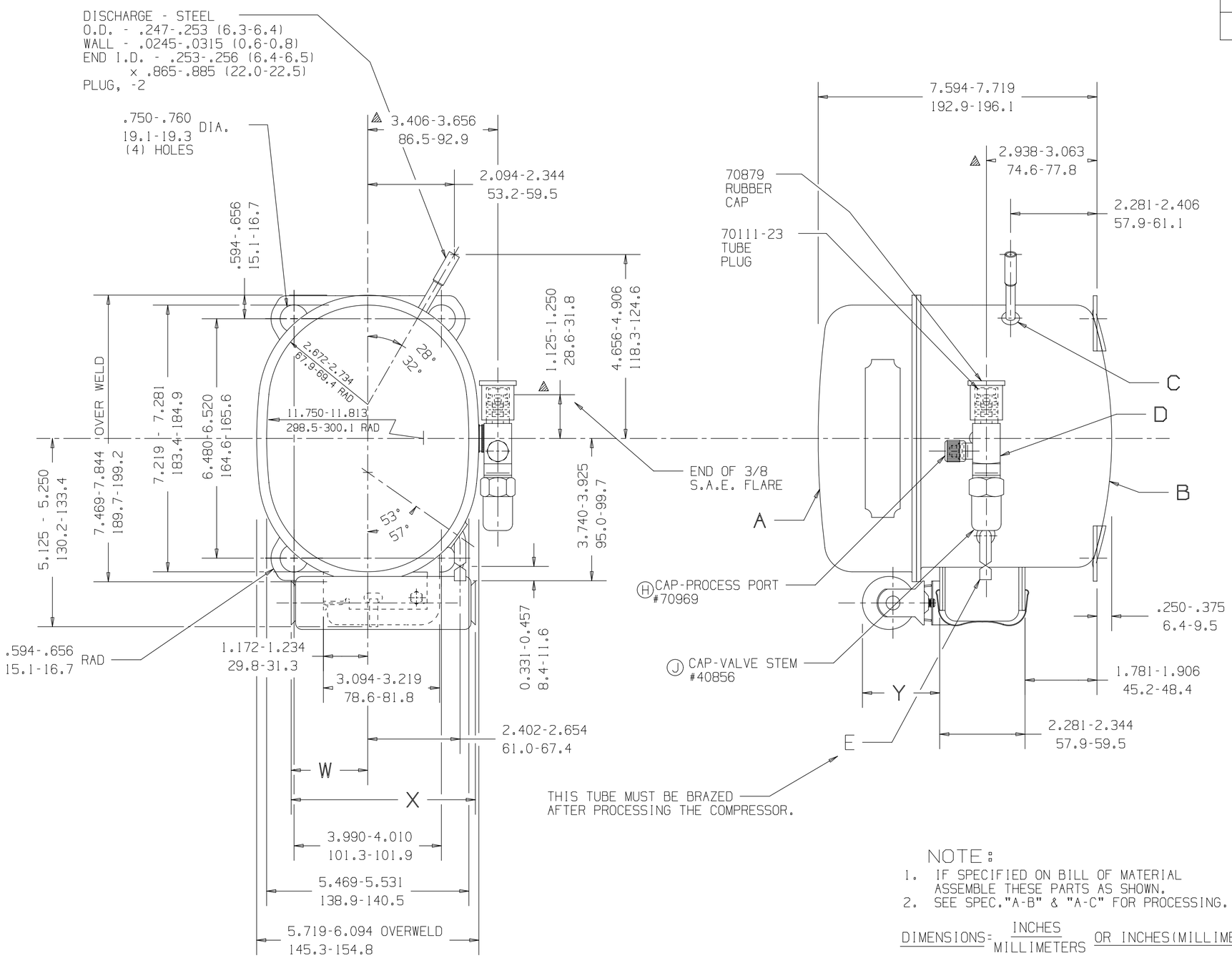

NOTE:
1. IF SPECIFIED ON BILL OF MATERIAL ASSEMBLE THESE PARTS AS SHOWN.
2. SEE SPEC."A-B" & "A-C" FOR PROCESSING.

DIMENSIONS: INCHES / MILLIMETERS OR INCHES(MILLIMETERS)

Q.A. SYMBOLS
✱ = CATEGORY I
▲ = CATEGORY II
▩ = CATEGORY III
= CATEGORY IV

AE

A	32095	
B	HA531-17	
C	34358-1	
(G) D	31580-1	
(K) E	34690	

CK.		APR.	CHANGE	DATE
K	6 A	REEVES 220CT98 #237508-000 ADDED TUBE #34690		
J	5 C	HWB 3/2/93 #40856 ADDED #226958		
H	5 C	HWB 3/2/93 #70969 ADDED #226958		
G	6 A	HWB 3/2/93 WAS A1149 #226958		
F	—	HWB 3/4/92 REDRAWN - NO CHANGE, ON TO CAD #220833		
LT	LC			

THIS DRAWING OR PRINT IS THE PROPERTY OF TECUMSEH PRODUCTS COMPANY (TECUMSEH) AND CONTAINS INFORMATION BELONGING TO TECUMSEH. (I) IT MAY NOT BE DISCLOSED TO RECIPIENT OR THE EXPRESS AND SPECIFIC CONDITION THAT NEITHER IT NOR THE INFORMATION THEREIN WILL BE DISCLOSED THEREIN SHALL BE DISCLOSED TO OTHERS WITHOUT THE EXPRESS AND SPECIFIC WRITTEN CONSENT OF TECUMSEH. (II) INFORMATION ONLY AS EXPRESSLY AND SPECIFICALLY AGREED TO BY TECUMSEH IN WRITING AND NOT OTHERWISE. (III) SHALL NOT BE REPRODUCED IN WHOLE OR IN ANY MANNER OR TO ANY EXTENT WITHOUT TECUMSEH'S PRIOR EXPRESS AND SPECIFIC WRITTEN CONSENT. (IV) SHALL BE RETURNED BY THE RECIPIENT TO TECUMSEH UPON THE RECEIPT OF LATTER'S REQUEST PROMPTLY AFTER SUCH REQUEST IS MADE.

DIS.CODE

DO NOT SCALE FROM THIS DRAWING. MATERIALS MUST NOT BE MAGNETIZED AS REQUIRED FOR COMPRESSOR ASSEMBLY.

NAME: SALES COMPRESSOR

DWN. BRODERICK 3/4/92 | CK. | MQ

THIS PRINT SUPERSEDES ALL PRINTS PRIOR TO

TECUMSEH PRODUCTS CO.
TECUMSEH, MICHIGAN

MATERIAL: NOTED

INTERNAL USE ONLY
P:\reeves\ae\ae-dcae668_k-c.prt

PART NO. DCAE668