PART NO DEAE-1

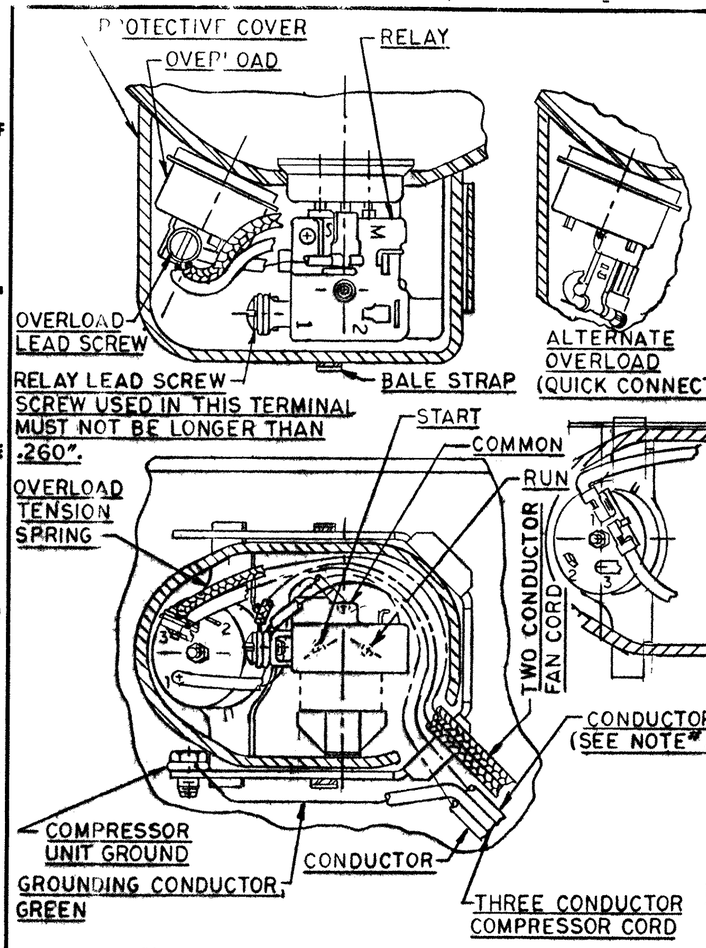

E.M.B. RELAY SHOWN WITH FAN (Ac)

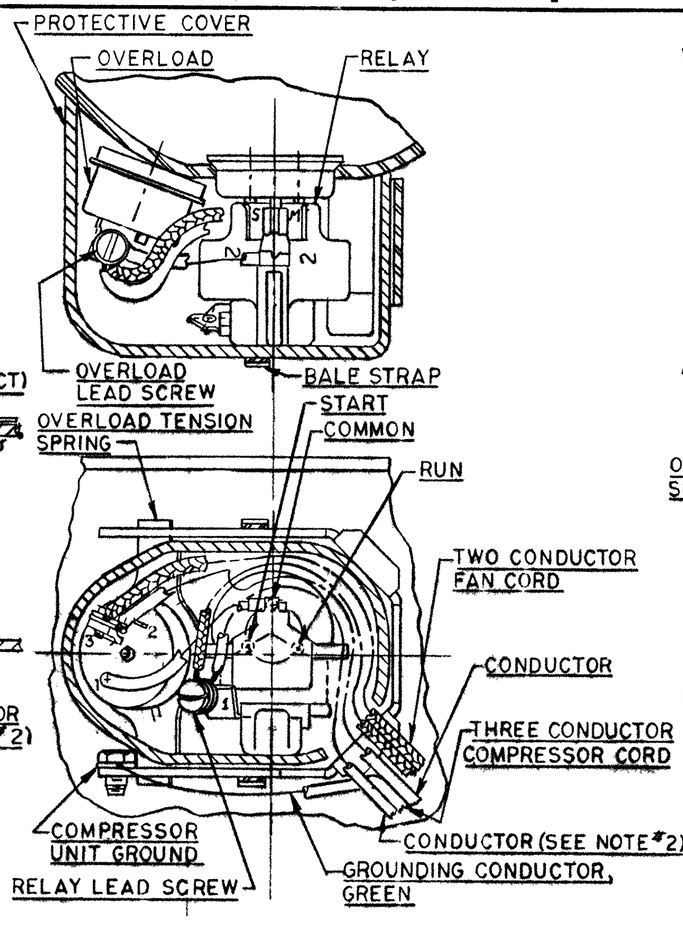

G.E. RELAY SHOWN WITH FAN

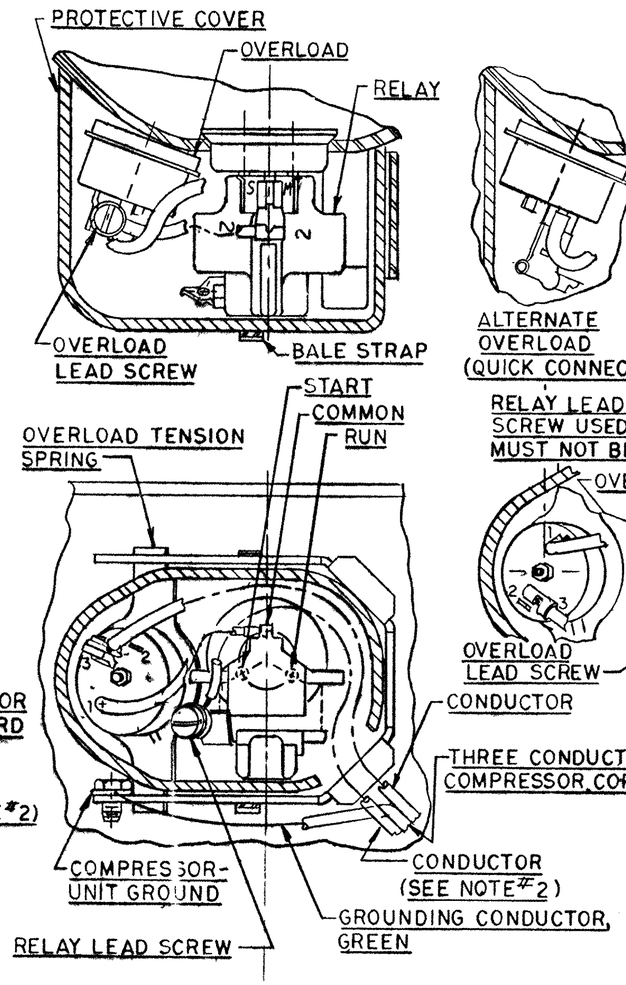

G.E. RELAY SHOWN NO FAN

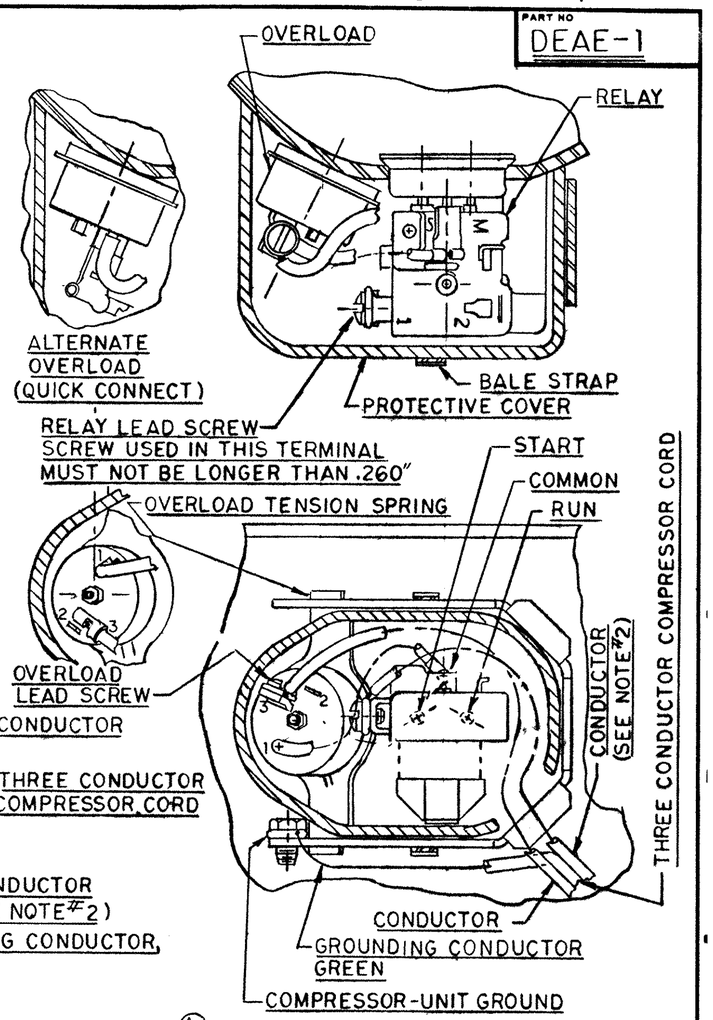

(Ac) E.M.B. RELAY SHOWN NO FAN

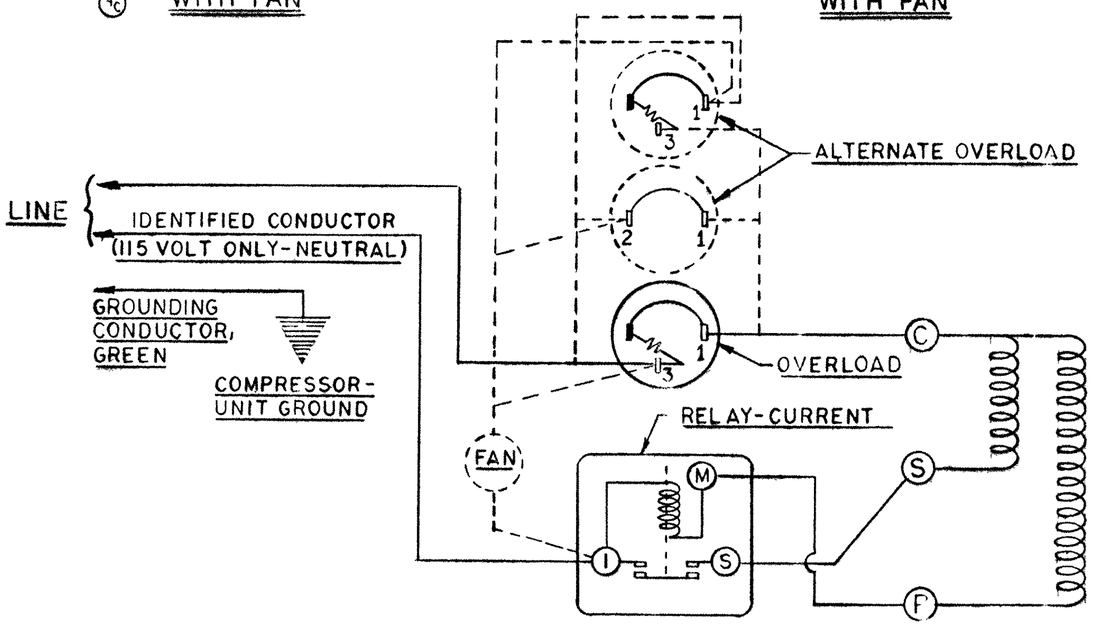

115 OR 230 VOLT-SCHEMATIC WIRING DIAGRAM-RSIR
"REF. DWG. MD-472"

NOTE:

1. WHEN FAN IS USED HOOK UP AS SHOWN.
2. IDENTIFIED CONDUCTOR-MAYBE WHITE OR RIBBED (115 VOLT ONLY-NEUTRAL).
3. ASSEMBLE PARTS AS SHOWN IF SPECIFIED ON B/M.
4. (Ad) COMPRESSOR UNIT GROUND SCREW IS NOT PROVIDED BY T.P. CO.

WARNING-WIRING DIAGRAM MUST BE FOLLOWED AS SHOWN. ANY MISWIRING CAN CAUSE SERIOUS ELECTRICAL HAZARD AND POTENTIAL DAMAGE OR RUPTURE OF COMPONENT ELECTRICAL PARTS.

AE

AE-115 OR 230 VOLT-RSIR-CURRENT RELAY-FAN, NO FAN-HORIZ. COVER-OVERLOAD LEFT

LT	LC	CHANGE	DATE
A5		235648 ADDED NOTE	WFM 4-17-97
D3			
A	B	235415 WAS T.I.	WFM 1-17-97
C	C		
A	E	212430 OVERLOAD DATA ADDED TO BE STOCK	EDC 4-23-96
A	A	209038 REVISED & REDRAWN	—

THIS DRAWING OR PRINT IS THE PROPERTY OF TECUMSEH PRODUCTS COMPANY (TECUMSEH) AND CONTAINS PROPRIETARY AND CONFIDENTIAL INFORMATION. THIS DRAWING OR PRINT (IF IT IS MADE AVAILABLE TO THE RECEIVER BY TECUMSEH) IS SUBJECT TO THE CONDITION THAT IT WILL BE RETURNED TO TECUMSEH UPON REQUEST. THE INFORMATION CONTAINED THEREON SHALL NOT BE DISCLOSED OR DISTRIBUTED TO OTHERS OR MADE AVAILABLE TO OTHERS WITHOUT THE EXPRESS WRITTEN CONSENT OF TECUMSEH, NOR SHALL ANY SUCH INFORMATION, SHALL IT BE DISCLOSED TO OTHERS, BE USED FOR ANY PURPOSE OTHER THAN THE SPECIFICALLY APPROVED IN WRITING BY TECUMSEH AND ANY OTHER PURPOSE INDICATED BY THE FACTS SHALL BE EXPRESSLY ACCEPTED IN ANY MANNER OR BY ANY PERSON UNLESS SUCH ACCEPTANCE IS EXPRESS AND SPECIFIC WRITTEN AGREEMENT BY TECUMSEH. ALL DRAWINGS OR PRINTS SUBMITTED TO THE RECEIVER BY TECUMSEH AT THE LATTER'S REQUEST IS TO BE RETURNED TO TECUMSEH SUPPLY AFTER SUCH REQUEST IS MADE.

DO NOT SCALE THIS DRAWING ALL FERROUS MATERIALS MUST BE ELECTROPLATED OR OTHERWISE PROTECTED FROM RUST OR AT COMPRESSOR ASSEMBLY

DIS. CODE 345d

NAME ELECTRICAL HOOK-UP

SCALE 1"=1"

THIS PRINT SUPERSEDES ALL PRINTS PRIOR TO

TECUMSEH PRODUCTS CO.
TECUMSEH, MICHIGAN

MATERIAL

PART NO DEAE-1