PART NO. DCAE910

	DIM. W	DIM. X	DIM. Y
WITH 3.875(98.4) LONG CAPACITOR	1.788-2.038 / 45.4-51.8	4.078-4.141 / 103.6-105.2	———
WITH 1.438(36.5) DIA. CAPACITOR	———	———	1.969-2.031 / 50.0-51.6
WITH 4.875(123.8) LONG CAPACITOR	2.436-2.686 / 61.9-68.2	5.078-5.141 / 129.0-130.6	———
WITH 1.813(46.1) DIA. CAPACITOR	———	———	2.344-2.406 / 59.5-61.1

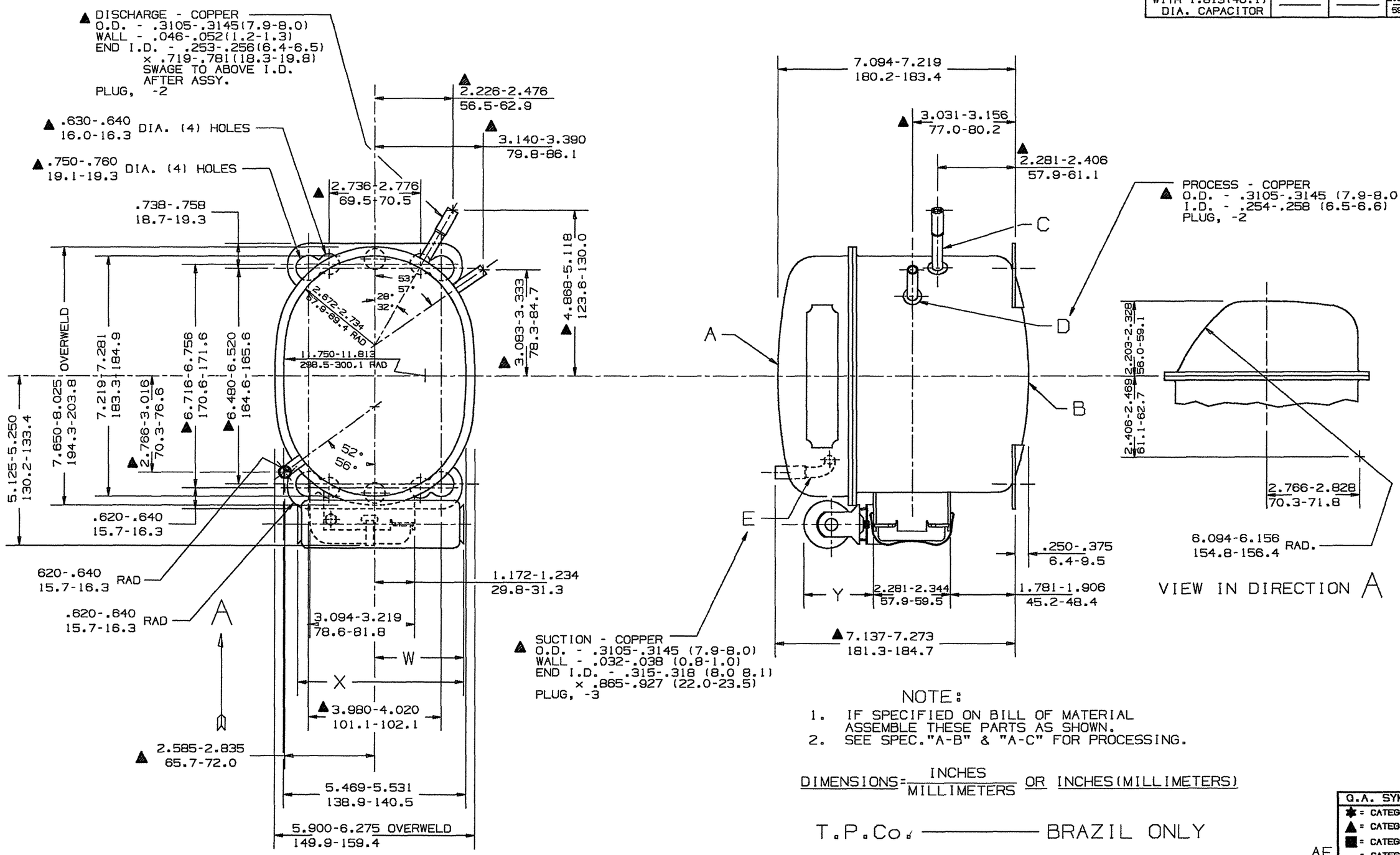

NOTE:

1. IF SPECIFIED ON BILL OF MATERIAL ASSEMBLE THESE PARTS AS SHOWN.
2. SEE SPEC."A-B" & "A-C" FOR PROCESSING.

DIMENSIONS = INCHES / MILLIMETERS OR INCHES(MILLIMETERS)

T.P.Co. ——— BRAZIL ONLY

AE

Q.A. SYMBOLS
✱ = CATEGORY I
▲ = CATEGORY II
■ = CATEGORY III
= CATEGORY IV

A	32134-1		HMB 12/17/93	RE-RELEASED FROM OBS. FILE #228859
B	HA624-6		HB 3/18/91	MTG. FEET REVISED #215841
C	34529		HB 2/4/91	RELEASED. WAS DCAE904 #218280
D	58073-5			
E	34787			

LT LC CHANGE DATE

THIS DRAWING OR PRINT (I) IS THE PROPERTY OF TECUMSEH PRODUCTS COMPANY AND CONTAINS PROPRIETARY AND CONFIDENTIAL INFORMATION BELONGING TO TECUMSEH. IT IS LOANED TO THE RECIPIENT ON THE EXPRESS AND IMPLIED AGREEMENT THAT THE RECIPIENT WILL NOT DUPLICATE OR PERMIT THE INFORMATION CONTAINED HEREON OR DISCLOSED HEREIN, IN WHOLE OR IN PART, TO ANY PERSON OR OTHERS WITHOUT THE EXPRESS AND WRITTEN CONSENT OF THE OWNER, TECUMSEH, AND THAT SUCH INFORMATION CAN BE USED ONLY FOR THE PURPOSE AND NOT OTHERWISE. (II) SHALL NOT BE REPRODUCED IN ANY FORM OR MANNER OR TO ANY EXTENT WITHOUT TECUMSEH'S PRIOR EXPRESS AND WRITTEN CONSENT. (III) SHALL BE RETURNED BY THE RECIPIENT UPON REQUEST AND IN ANY EVENT AFTER SUCH REQUEST IS MADE. (IV) DO NOT SCALE THIS DRAWING. ALL ERRORS, MATERIALS MUST NOT BE MAGNETIZED, AS CONFIGURED OR AT ASSEMBLY.

DIS.CODE 340

NAME SALES COMPRESSOR

SCALE 1"=2"

THIS PRINT SUPERSEDES ALL PRINTS PRIOR TO

TECUMSEH PRODUCTS CO.
TECUMSEH, MICHIGAN

MATERIAL NOTED

INTERNAL USE ONLY
U6\DISK5:[BRODERICK]AE-DCAE910□B-C.PRT

PART NO. DCAE910