PART NO.
DCAE906

	DIM. W	DIM. X	DIM. Y
WITH 3.875(98.4) LONG CAPACITOR	1.788-2.038 / 45.4-51.8	4.078-4.141 / 103.6-105.2	———
WITH 1.438(36.5) DIA. CAPACITOR	———	———	1.969-2.031 / 50.0-51.6
WITH 4.875(123.8) LONG CAPACITOR	2.436-2.686 / 61.9-68.2	5.078-5.141 / 129.0-130.6	———
WITH 1.813(46.1) DIA. CAPACITOR	———	———	2.344-2.406 / 59.5-61.1

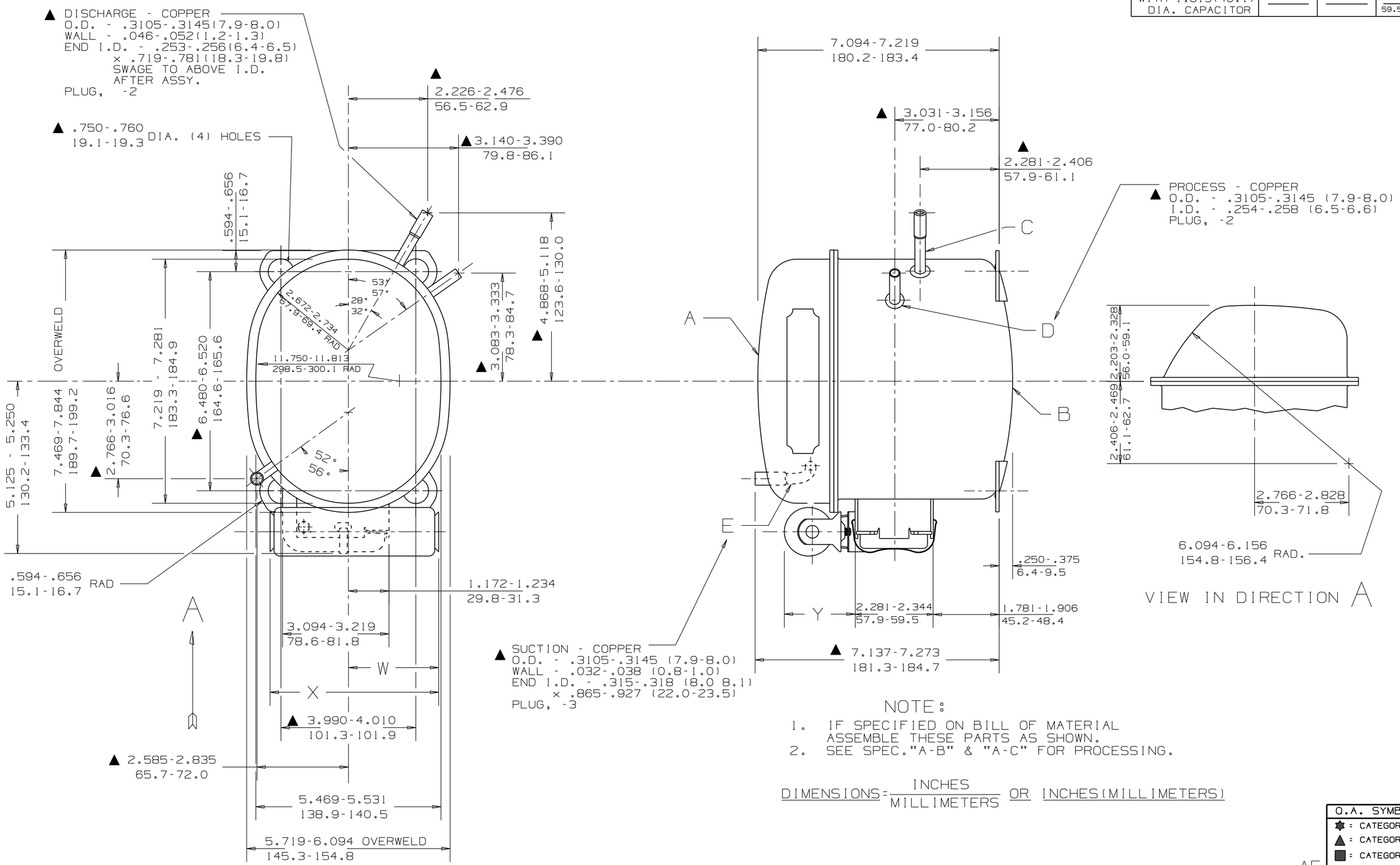

NOTE:

1. IF SPECIFIED ON BILL OF MATERIAL ASSEMBLE THESE PARTS AS SHOWN.
2. SEE SPEC."A-B" & "A-C" FOR PROCESSING.

DIMENSIONS = INCHES / MILLIMETERS OR INCHES(MILLIMETERS)

O.A. SYMBOLS
★ = CATEGORY I
▲ = CATEGORY II
■ = CATEGORY III
= CATEGORY IV

AE

A	32085-1		T.M.G 30MAR07	HB 1/21/91
B	HA531-31			
Ⓐ C	BR34529-2		EC4192 WAS 34529	REDRAWN & REVISED WAS EXDCAE2018 #221126
D	58073-5			
E	34787			
			A 6A	REL

DATE / CHANGE / LT LC

THIS DRAWING OR PRINT (I) IS THE PROPERTY OF TECUMSEH PRODUCTS COMPANY (TECUMSEH) AND CONTAINS PROPRIETARY AND CONFIDENTIAL INFORMATION BELONGING TO TECUMSEH. INFORMATION MADE AVAILABLE TO THE RECIPIENT ON THE EXPRESS AND SPECIFIC CONDITION THAT THE RECIPIENT WILL NOT DISCLOSE OR UPLOAD INFORMATION NOR THE INFORMATION CONTAINED HEREIN TO ANY THIRD PARTY OR OTHERS WITHOUT THE EXPRESS AND SPECIFIC WRITTEN CONSENT OF TECUMSEH AND THAT SUCH INFORMATION WILL BE USED ONLY FOR THE SPECIFICALLY AUTHORIZED PURPOSE (II) SHALL NOT BE COPIED IN WHOLE OR IN PART IN ANY MANNER OR TO ANY EXTENT WITHOUT TECUMSEH'S PRIOR EXPRESS AND SPECIFIC WRITTEN CONSENT AND (III) SHALL BE RETURNED BY THE RECIPIENT TO TECUMSEH IMMEDIATELY AFTER LATTER'S REQUEST PROMPTLY AFTER SUCH REQUEST IS MADE.

DIS.CODE

NAME: SALES COMPRESSOR

SCALE: 1" = 2"

THIS PRINT SUPERSEDES ALL PRINTS PRIOR TO

TECUMSEH PRODUCTS CO.
TECUMSEH, MICHIGAN

DO NOT SCALE THIS DRAWING. ALL FERROUS MATERIALS MUST NOT BE MAGNETIZED AS CONSTRUED BY A COMPRESSOR ASSEMBLY

MATERIAL: NOTED

PART NO.: DCAE906