DRAWING NO. DEAG02

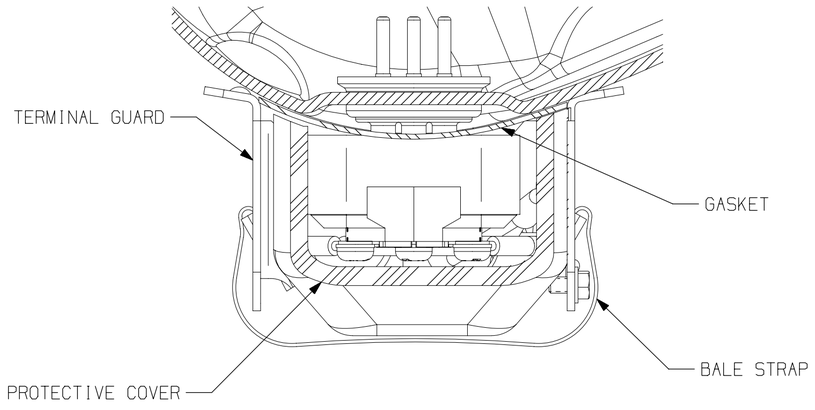

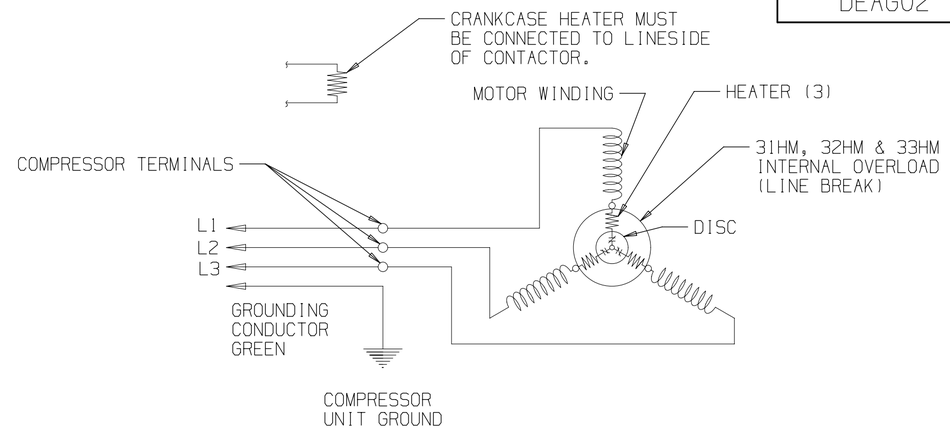

SCHEMATIC WIRING DIAGRAM - 3 PHASE INTERNAL OVERLOAD (LINE BREAK) AND CRANKCASE HEATER. REF DWG MD472-43

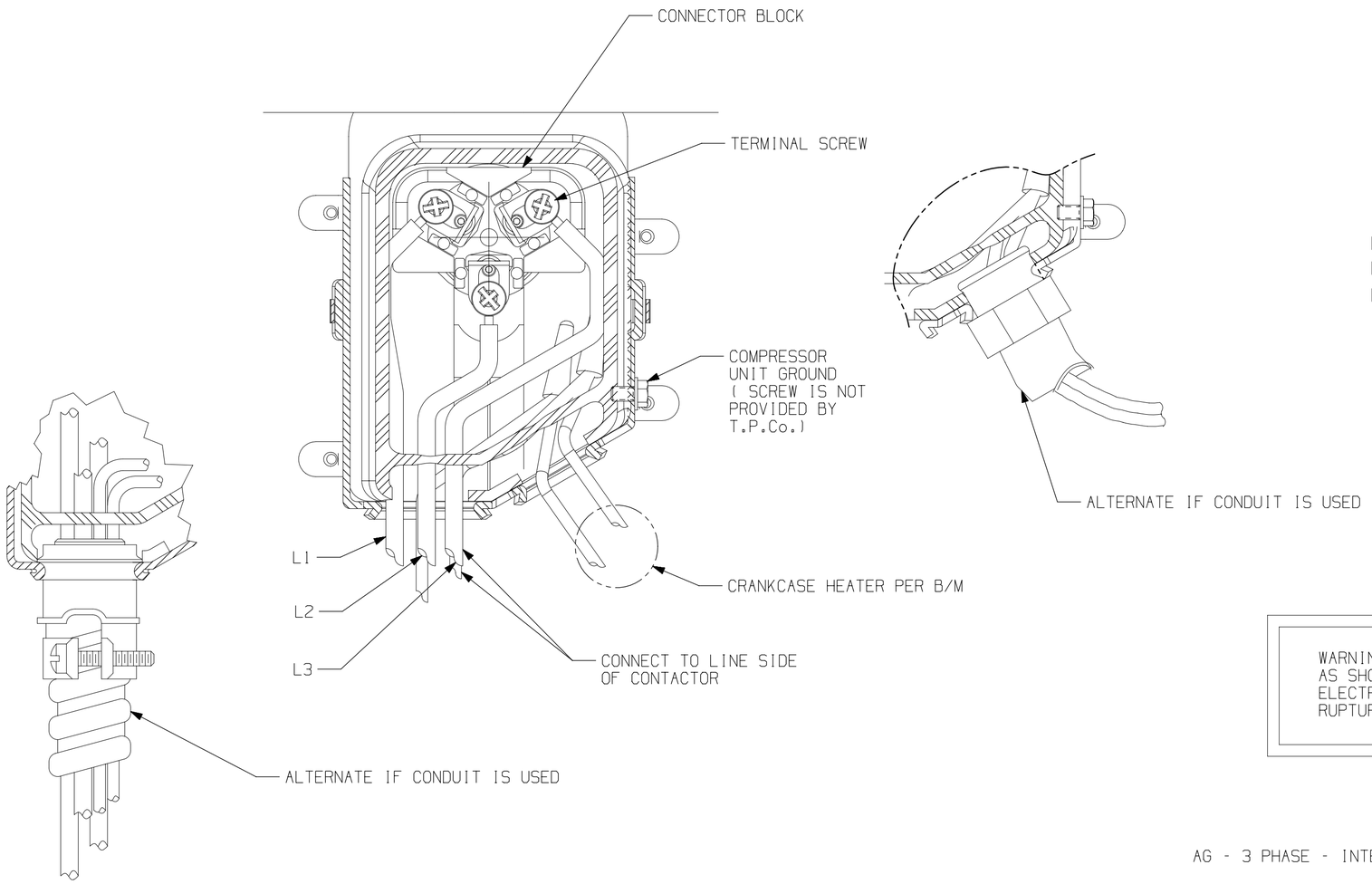

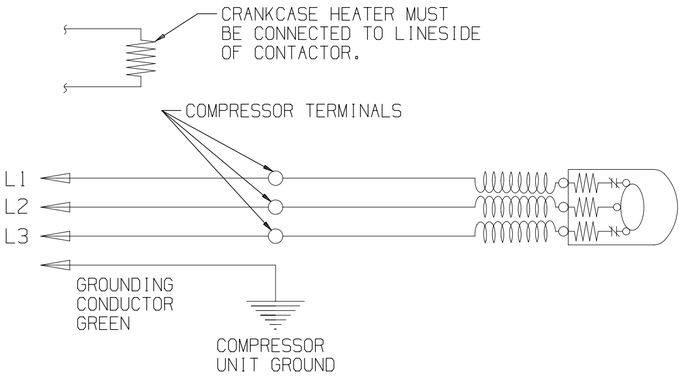

SCHEMATIC WIRING DIAGRAM - 3 PHASE INTERNAL OVERLOAD (LINE BREAK) AND CRANKCASE HEATER.

WARNING-WIRING DIAGRAM MUST BE FOLLOWED AS SHOWN. ANY MISWIRING CAN CAUSE SERIOUS ELECTRICAL HAZARD AND POTENTIAL DAMAGE OR RUPTURE OF COMPONENT ELECTRICAL PARTS.

AG - 3 PHASE - INTERNAL OVERLOAD (LINE BREAK)- CRANKCASE HEATER.

ENGLISH

Q.A. SYMBOLS
☆ = CATEGORY I
△ = CATEGORY II
□ = CATEGORY III
= CATEGORY IV

AG

LT	LC	CHANGE	DATE
T	—	#240574-089 REDRAWN ON UNIGRAPHICS AND UPDATED WITH MD472-43	I

THIS DRAWING OR PRINT (I) IS THE PROPERTY OF TECUMSEH PRODUCTS COMPANY (TECUMSEH) AND CONTAINS PROPRIETARY AND CONFIDENTIAL INFORMATION BELONGING TO TECUMSEH. (II) IS MADE AVAILABLE TO THE RECIPIENT ON THE EXPRESS AND SPECIFIC CONDITION THAT NEITHER IT NOR THE INFORMATION CONTAINED THEREON OR DISCLOSED THEREIN SHALL BE DISCLOSED OR MADE AVAILABLE TO OTHERS WITHOUT THE EXPRESS AND SPECIFIC WRITTEN CONSENT OF TECUMSEH AND THAT SUCH INFORMATION ONLY AS EXPRESSLY AND SPECIFICALLY APPROVED IN WRITING BY TECUMSEH AND NOT OTHERWISE. (III) SHALL NOT BE COPIED OR DUPLICATED IN ANY MANNER OR TO ANY EXTENT WITHOUT TECUMSEH'S PRIOR EXPRESS AND SPECIFIC WRITTEN CONSENT AND (IV) SHALL BE RETURNED BY THE RECIPIENT TO TECUMSEH AT THE LATTER'S REQUEST PROMPTLY AFTER SUCH REQUEST IS MADE.

DIS.CODE

DO NOT SCALE THIS DRAWING ALL FERROUS MATERIALS MUST NOT BE MAGNETIZED AS RECEIVED OR AT COMPRESSOR ASSEMBLY.

NAME: ELECTRICAL HOOK-UP

DWN. EAC 17MAR05

CK

THIS PRINT SUPERSEDES ALL PRINTS PRIOR TO

TECUMSEH PRODUCTS CO.
TECUMSEH, MICHIGAN

MATERIAL: N/A

DRAWING No. MD888-08

REVISION LEVEL: REL

DRAWING NO. DEAG02

BANNER