PART NO.
DCAG-14

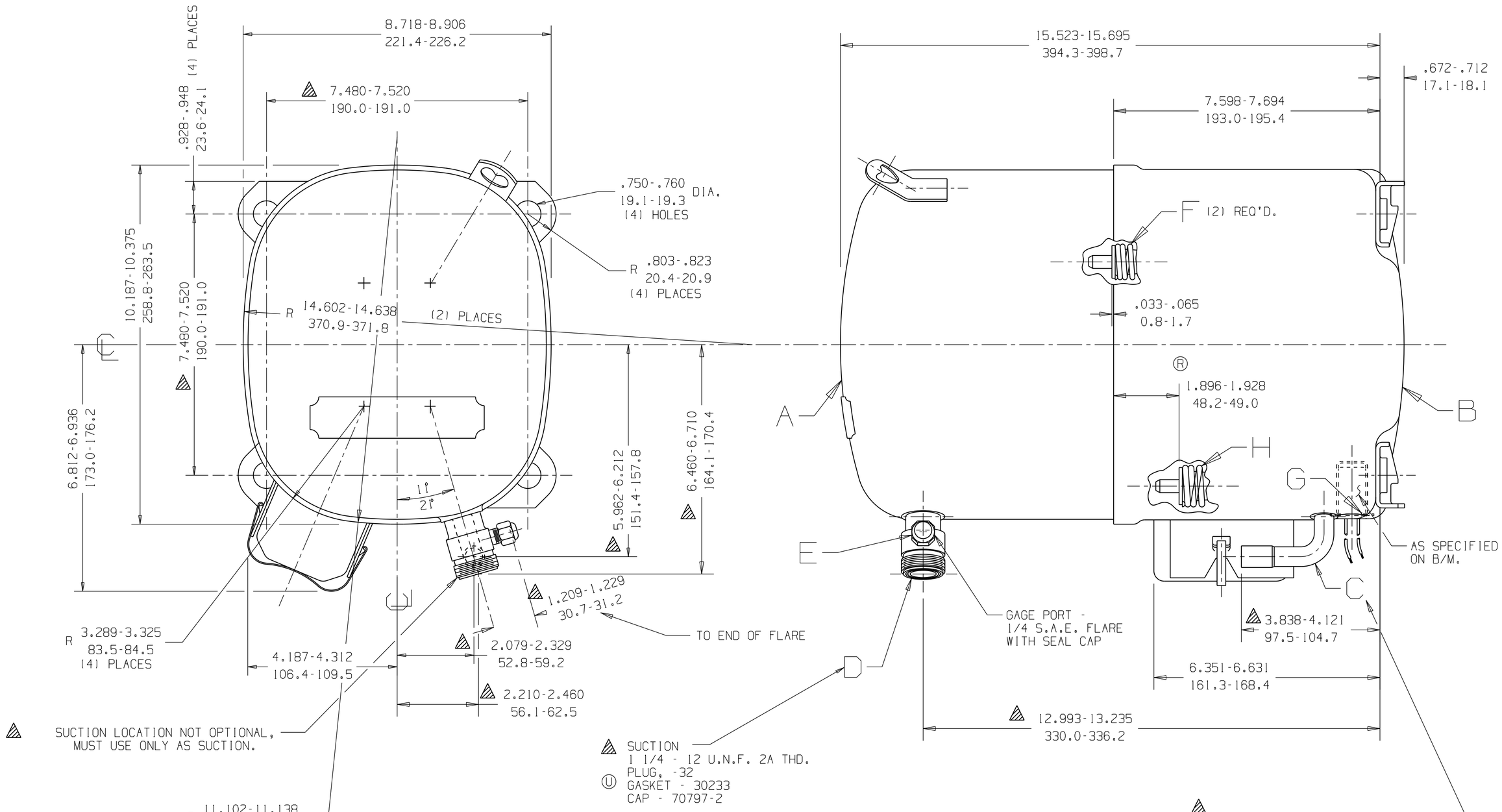

NOTE !

1. IF SPECIFIED ON BILL OF MATERIAL ASSEMBLE THESE PARTS AS SHOWN.
2. PLACEMENT OF HEATER LEADS - THRU BOTTOM HOLE IN FENCE ON COMPRESSOR WITH COVER, OR THRU BALE STRAP HOLE ON COMPRESSOR WITHOUT COVER.

MANUFACTURING NOTES !

1. SEE DWG. #AHT-17 FOR ASS'Y. OF DISCH. CONN. TUBE & LOWER SHOCK LOOP IN LOWER HOUSING.
2. SEE SPEC. "A-B" & "A-C" FOR PROCESSING.

DIMENSIONING : INCHES / MILLIMETERS OR INCHES - (MILLIMETERS)

G	28080-3	A	HA605-16			T.M.G 31OCT06			T.M.G 2/10/98								
H	26222-1	B	HA604-7			T.M.G 12DEC01			#232836-002 WAS PLUG -9								
		C	34602			EC2352 LOWER HOUSING WAS -5			#221617 WAS 3003			A.S.C. 5/11/90					
		D	40518-2			#241151-000 WAS HA605-6			#219823 ADDED O.A. SYMBOLS			A.S.C. 6/1/89					
		E	70969			REVISED TO V16			#217685 WAS 1.863-1.895			J.F.J. 3/22/88					
		F	26223			W	5A	V	5A	U	B5	T	6 A	S	-	R	D2