PART NO.
DCAH504

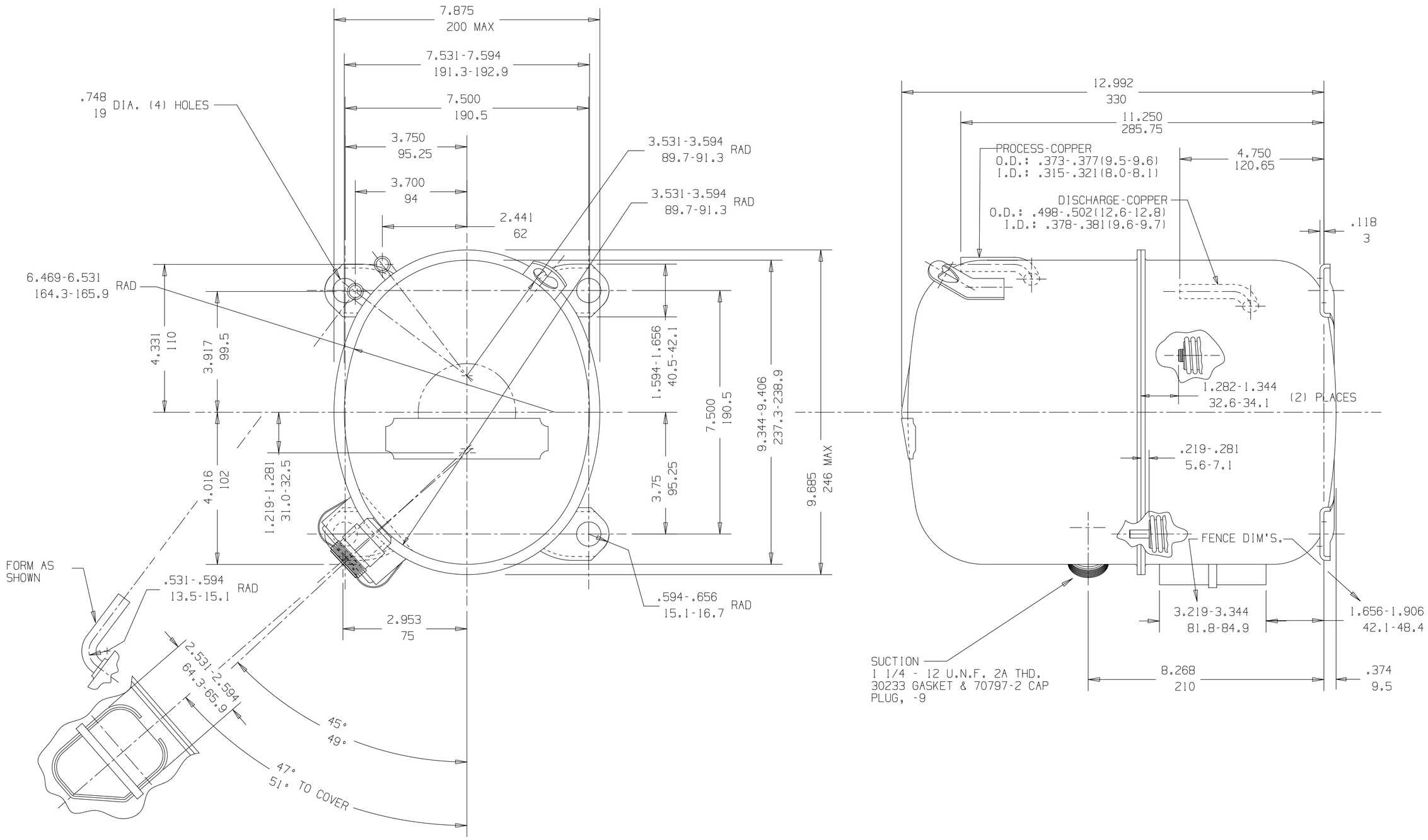

LOW VA

Q.A. SYMBOLS

DIMENSIONING = INCHES / MILLIMETERS OR INCHES - (MILLIMETERS)

AH

NOTE!

1. IF SPECIFIED ON BILL of MATERIAL ASSEMBLE THESE PARTS AS SHOWN.
2. SEE SPEC. "A-B" & "A-C"" FOR PROCESSING.
3. USES SMALL AND LARGE TERMINALS.

REL	CHANGE	DATE	APR.	CK.
A	#237279-001	1/8/98		
—	#237279-001	—		

LT LC

THIS DRAWING OR PRINT (I) IS THE PROPERTY OF TECUMSEH PRODUCTS COMPANY AND CONTAINS PROPRIETARY AND CONFIDENTIAL INFORMATION BELONGING TO TECUMSEH. IT IS LOANED TO THE RECIPIENT ON THE EXPRESS AND SPECIFIC CONDITION THAT NEITHER IT NOR THE INFORMATION CONTAINED HEREIN SHALL BE DISCLOSED OR USED IN WHOLE OR IN PART FOR ANY PURPOSE OTHER WITHOUT THE EXPRESS AND WRITTEN CONSENT OF TECUMSEH AND THAT SUCH INFORMATION SHALL NOT BE REPRODUCED, COPIED, OR OTHERWISE DISPOSED OF, EXCEPT AS APPROVED IN WRITING BY TECUMSEH, AND CONSIDERED TO BE LIKE INFORMATION OF TECUMSEH. (II) IT SHALL NOT BE USED IN ANY MANNER OR TO ANY EXTENT WITHOUT THE EXPRESS AND WRITTEN CONSENT OF TECUMSEH AND (IV) SPECIFIC RETURN OF THE DRAWING OR PRINT TO TECUMSEH AT THE LATTER'S REQUEST PROMPTLY AFTER THEY HAVE BEEN USED.

DIS.CODE

DO NOT SCALE THIS DRAWING ALL FERROUS MATERIALS MUST NOT BE WET WHEN RECEIVED OR AT COMPRESSOR ASSEMBLY.

NAME: SALES COMPRESSOR

DWN. J.R.G. 9/10/98

TECUMSEH PRODUCTS CO.
TECUMSEH, MICHIGAN

MATERIAL

INTERNAL USE ONLY

p:\gotha\ah-dcah504_a-c.prt

THIS PRINT SUPERSEDES ALL PRINTS PRIOR TO

PART NO. DCAH504