PART NO. DCAJ-193

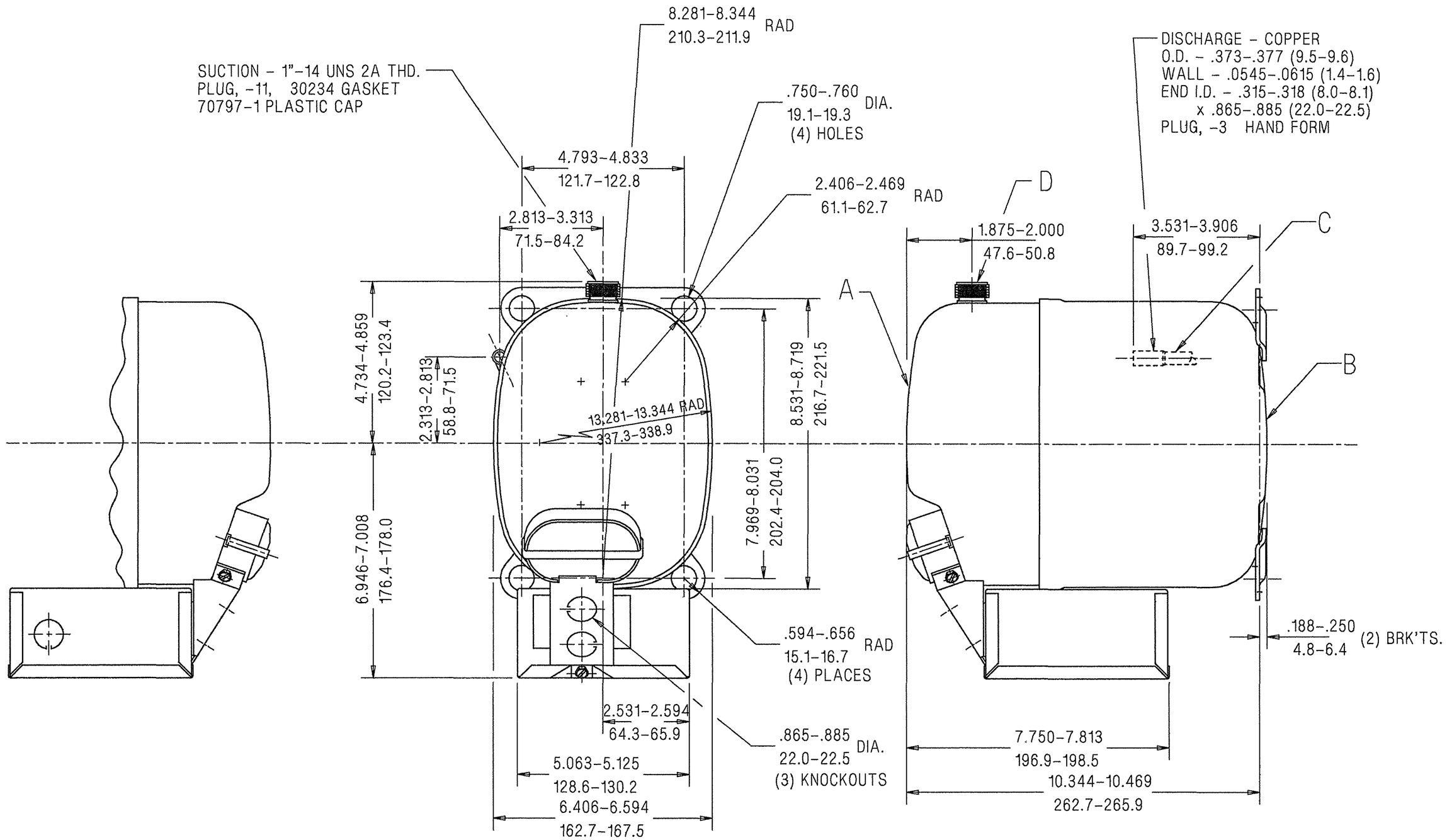

DIMENSIONING = INCHES / MILLIMETERS OR INCHES (MILLIMETERS)

NOTE!

1. IF SPECIFIED ON BILL OF MATERIAL ASSEMBLE THESE PARTS AS SHOWN.
2. SEE SPEC. "A-B" & "A-C" FOR PROCESSING.

AJ

Q.A. SYMBOLS
✱ = CATEGORY I
▲ = CATEGORY II
■ = CATEGORY III
= CATEGORY IV

NOTE!

1. SEE DWG. #AHT-1 FOR ASSEMBLY OF DISCHARGE CONNECTOR AND LOWER SHOCK LOOP IN LOWER HOUSING.

A	HA-635-16		N.L.C. 8-11-95	HB 12-3-87	
B	HA-634				
C	34366-1		#228106-1 REMOVED HA-536-111 & HA-535	REDRAWN - NO CHANGE #212377	
D	40564				
			6A	—	M
			N		

(N)

CHANGE / DATE / LC / LT

THIS DRAWING OR PRINT (IS) IS THE PROPERTY OF TECUMSEH PRODUCTS COMPANY (TECUMSEH) AND CONTAINS PROPRIETARY AND CONFIDENTIAL INFORMATION OF TECUMSEH. (II) IS MADE AVAILABLE TO THE RECIPIENT ON A CONFIDENTIAL BASIS UNDER THE SPECIFIC CONDITION THAT NEITHER IT NOR THE INFORMATION CONTAINED THEREIN SHALL BE DISCLOSED OR MADE AVAILABLE TO ANYONE WITHOUT THE WRITTEN CONSENT OF TECUMSEH AND THAT SUCH INFORMATION SHALL NOT BE USED FOR ANY PURPOSE OTHER THAN THE SPECIFIC WRITTEN PURPOSE FOR WHICH IT WAS SUBMITTED. TECUMSEH AND THAT SUCH INFORMATION SHALL NOT BE REPRODUCED IN WHOLE OR IN PART IN ANY MANNER OR TO ANY EXTENT WITHOUT APPROVED IN WRITING BY TECUMSEH AND WITHOUT SUCH WRITTEN CONSENT AND (IV) AND COPIED OR REPRODUCED IN ANY MANNER OR TO ANY EXTENT WITHOUT SPECIFIC WRITTEN CONSENT AND (IV) SHALL BE RETURNED BY THE RECIPIENT LATTER'S REQUEST PROMPTLY AFTER THE INFORMATION IS NO LONGER USED.

DIS.CODE: 34D

DO NOT SCALE THIS DRAWING. ALL FERROUS MATERIALS MUST NOT BE MAGNETIC AS REQUIRED OF A COMPRESSOR ASSEMBLY.

NAME: SALES COMPRESSOR

SCALE: 1"=2"

THIS PRINT SUPERSEDES ALL PRINTS PRIOR TO

TECUMSEH PRODUCTS CO.
TECUMSEH, MICHIGAN

MATERIAL

INTERNAL USE ONLY
UG:IIDISK5:[CLARK]AJ-DCAJ193□N-C.PRT

PART NO. DCAJ-193