DRAWING NO.
DCAJ432

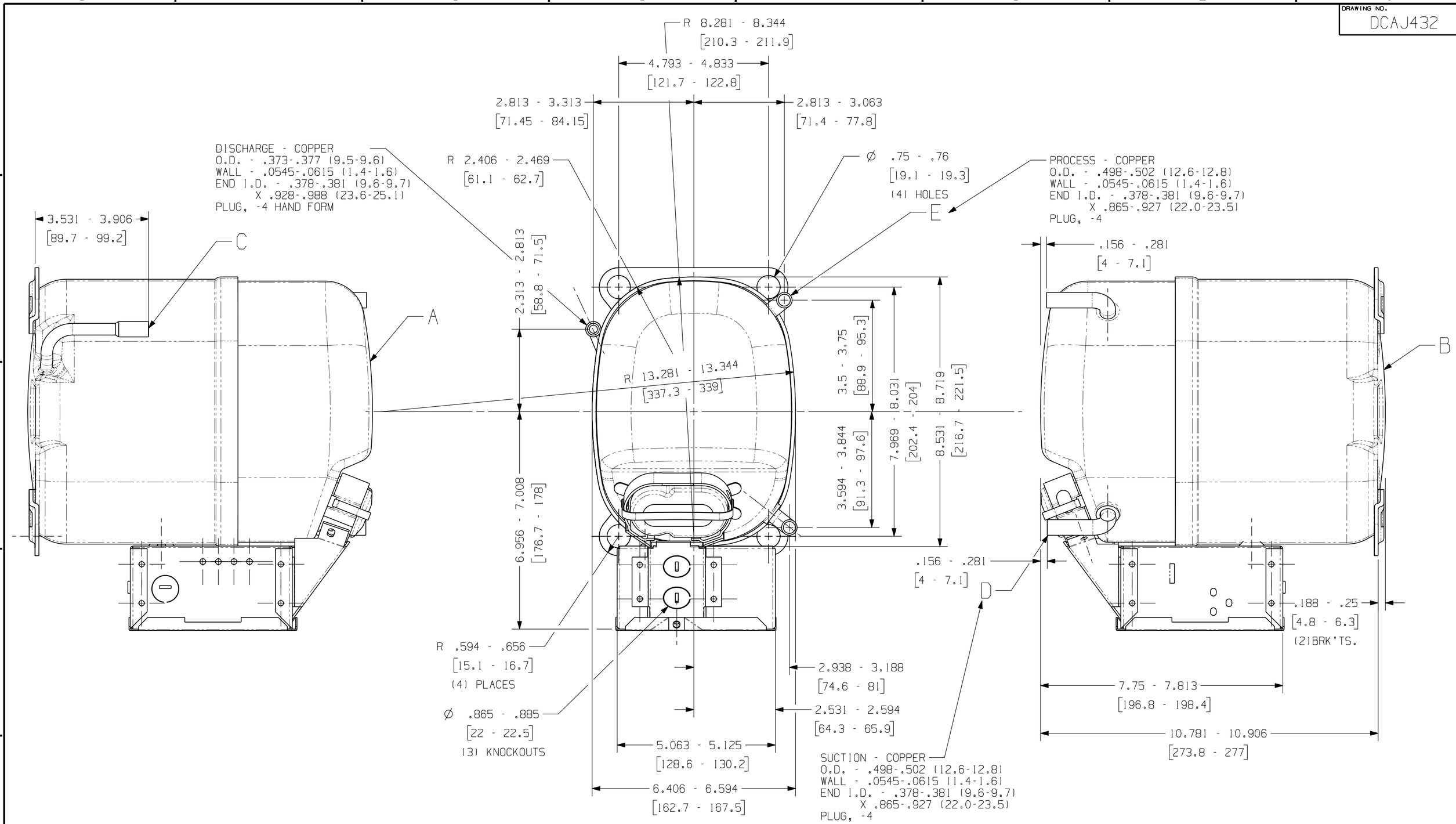

DIMENSIONING = INCHES / MILLIMETERS OR INCHES (MILLIMETERS)

NOTE!
1. SEE DWG. #AHT1 FOR ASSEMBLY OF DISCHARGE CONNECTOR AND LOWER SHOCK LOOP IN LOWER HOUSING.

NOTE!
1. IF SPECIFIED ON BILL OF MATERIAL ASSEMBLE THESE PARTS AS SHOWN.
2. SEE SPEC. "A-B" & "A-C" FOR PROCESSING.

ENGLISH

Q.A. SYMBOLS
☆ = CATEGORY I
△ = CATEGORY II
□ = CATEGORY III
= CATEGORY IV

AJ

A	HA635-11		T.M.G 21APR06	—	DATE
B	HA705-01		#244623-000 B WAS HA634	MODEL & REDRAWN	CHANGE
C	34366-2			#228363	
D	34372				
E	34372				
			6A	--	—
			A		REL

LT LC

THIS DRAWING OR PRINT (I) IS THE PROPERTY OF TECUMSEH PRODUCTS COMPANY AND CONTAINS PROPRIETARY AND CONFIDENTIAL INFORMATION OF TECUMSEH. (II) IS MADE AVAILABLE TO THE RECIPIENT ON THE EXPRESS AND IMPLIED CONDITION THAT WHEN IT IS NOT IN USE IT SHALL BE DISCLOSED OR MADE AVAILABLE TO OTHERS WITHOUT THE EXPRESS AND SPECIFIC WRITTEN CONSENT OF TECUMSEH AND THAT SUCH INFORMATION AND OTHER DATA (III) SHALL NOT BE REPRODUCED IN ANY EXTENT WITHOUT APPROVED EXPRESS WRITTEN BY TECUMSEH AND NOT OTHERWISE USE (IV) IN ANY MANNER OR TO ANY EXTENT WITHOUT SPECIFIC WRITTEN CONSENT AND (V) SHALL BE RETURNED BY THE RECIPIENT TO TECUMSEH UPON REQUEST. THE LATTER'S REQUEST PROMPTLY AFTER SUCH REQUEST IS MADE.

DIS.CODE

DO NOT SCALE THIS DRAWING. ALL FERROUS MATERIALS MUST NOT BE MAGNETIZED AS DESCRIBED IN A COMPRESSOR ASSEMBLY.

NAME: SALES COMPRESSOR

SCALE: 1:1 & NOTED

THIS PRINT SUPERSEDES ALL PRINTS PRIOR TO

TECUMSEH PRODUCTS CO.
TECUMSEH, MICHIGAN

MATERIAL: NOTED

DRAWING NO.: DCAJ432

DRAWING No.: MD888-08

REVISION LEVEL: REL

BANNER
User: tgrifith Part/Rev: aj-dcaj432_a-c.prt Date: 03-May-06 Time: 10:34