PART NO. DCAJ-193

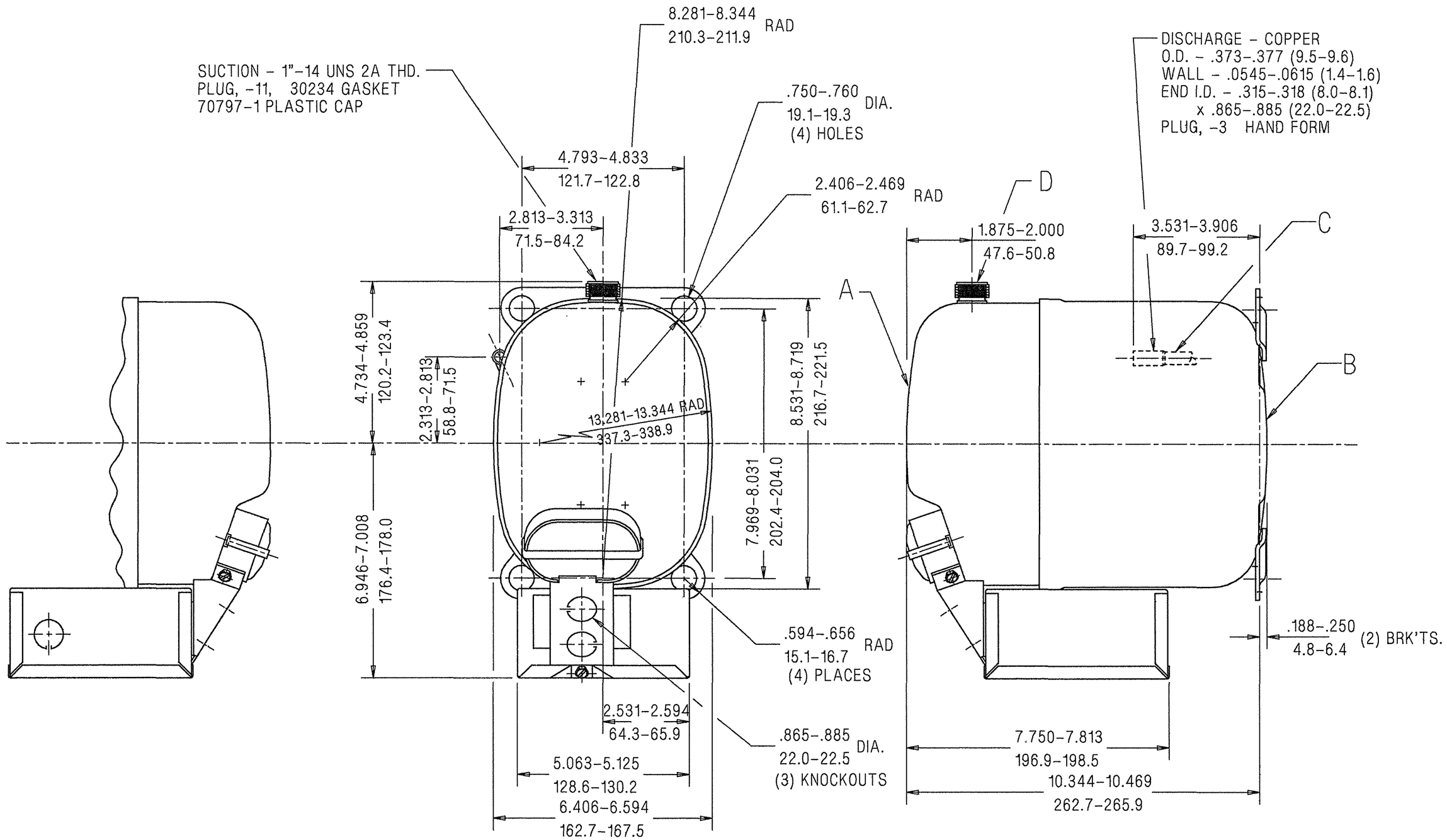

DIMENSIONING = INCHES / MILLIMETERS OR INCHES (MILLIMETERS)

NOTE!

1. IF SPECIFIED ON BILL OF MATERIAL ASSEMBLE THESE PARTS AS SHOWN.
2. SEE SPEC. "A-B" & "A-C" FOR PROCESSING.

NOTE!

1. SEE DWG. #AHT-1 FOR ASSEMBLY OF DISCHARGE CONNECTOR AND LOWER SHOCK LOOP IN LOWER HOUSING.

A	HA-635-16		N.L.C. 8-11-95	HB 12-3-87	
B	HA-634				
C	34366-1		#228106-1 REMOVED HA-536-111 & HA-535	REDRAWN - NO CHANGE #212377	
D	40564				
			N 6A	M -	

Q.A. SYMBOLS
✱ = CATEGORY I
▲ = CATEGORY II
■ = CATEGORY III
= CATEGORY IV

AJ

DIS.CODE 34D

NAME SALES COMPRESSOR

SCALE 1"=2"

THIS PRINT SUPERSEDES ALL PRINTS PRIOR TO

TECUMSEH PRODUCTS CO.
TECUMSEH, MICHIGAN

MATERIAL

INTERNAL USE ONLY
UGIIDISK5:[CLARK]AJ-DCAJ193□N-C.PRT

PART NO. DCAJ-193