PART NO. DCAJ430

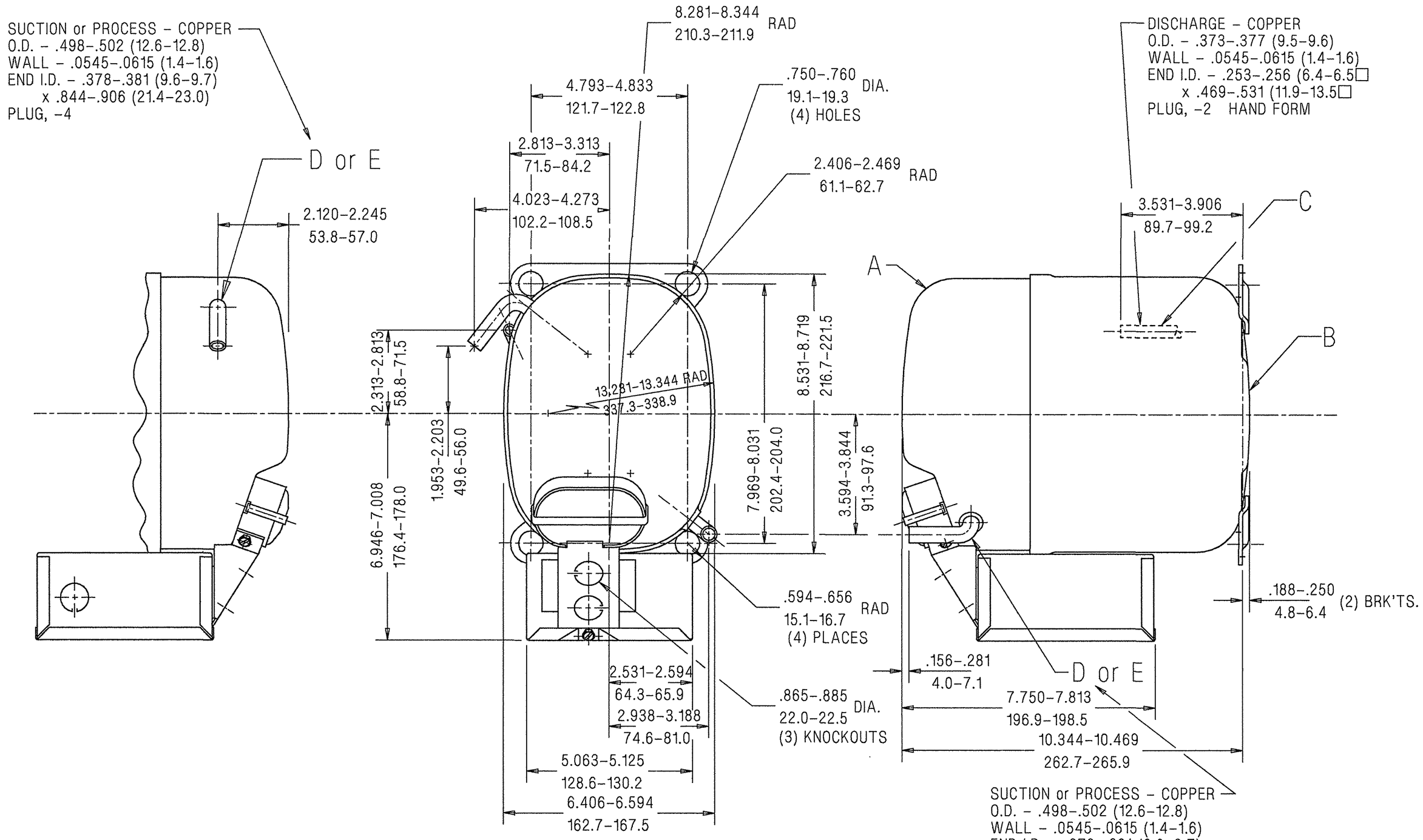

NOTE!

1. IF SPECIFIED ON BILL OF MATERIAL ASSEMBLE THESE PARTS AS SHOWN.
2. SEE SPEC. "A-B" & "A-C" FOR PROCESSING.

NOTE!

1. SEE DWG. #AHT1 FOR ASSEMBLY OF DISCHARGE CONNECTOR AND LOWER SHOCK LOOP IN LOWER HOUSING.

A	HA635-6		N.L.C. 8-14-95	HB 5/31/90			
B	HA634						
C	34366		#228106-1 REMOVED HA-536-99 & HA-535	WAS EXDCAJ-1983 #221861			
D	34372						
E	34372						
			A 6A	REL	LT	LC	CHANGE	DATE

Q.A. SYMBOLS
✱ = CATEGORY I
▲ = CATEGORY II
■ = CATEGORY III
= CATEGORY IV

AJ

DIS.CODE 34D

NAME SALES COMPRESSOR

SCALE 1"=2"

THIS PRINT SUPERSEDES ALL PRINTS PRIOR TO

TECUMSEH PRODUCTS CO.
TECUMSEH, MICHIGAN

MATERIAL

INTERNAL USE ONLY
UG||DISK5:[CLARK]AJ-DCAJ430□A-C.PRT

PART NO. DCAJ430