PART NO.
DCAJ-205

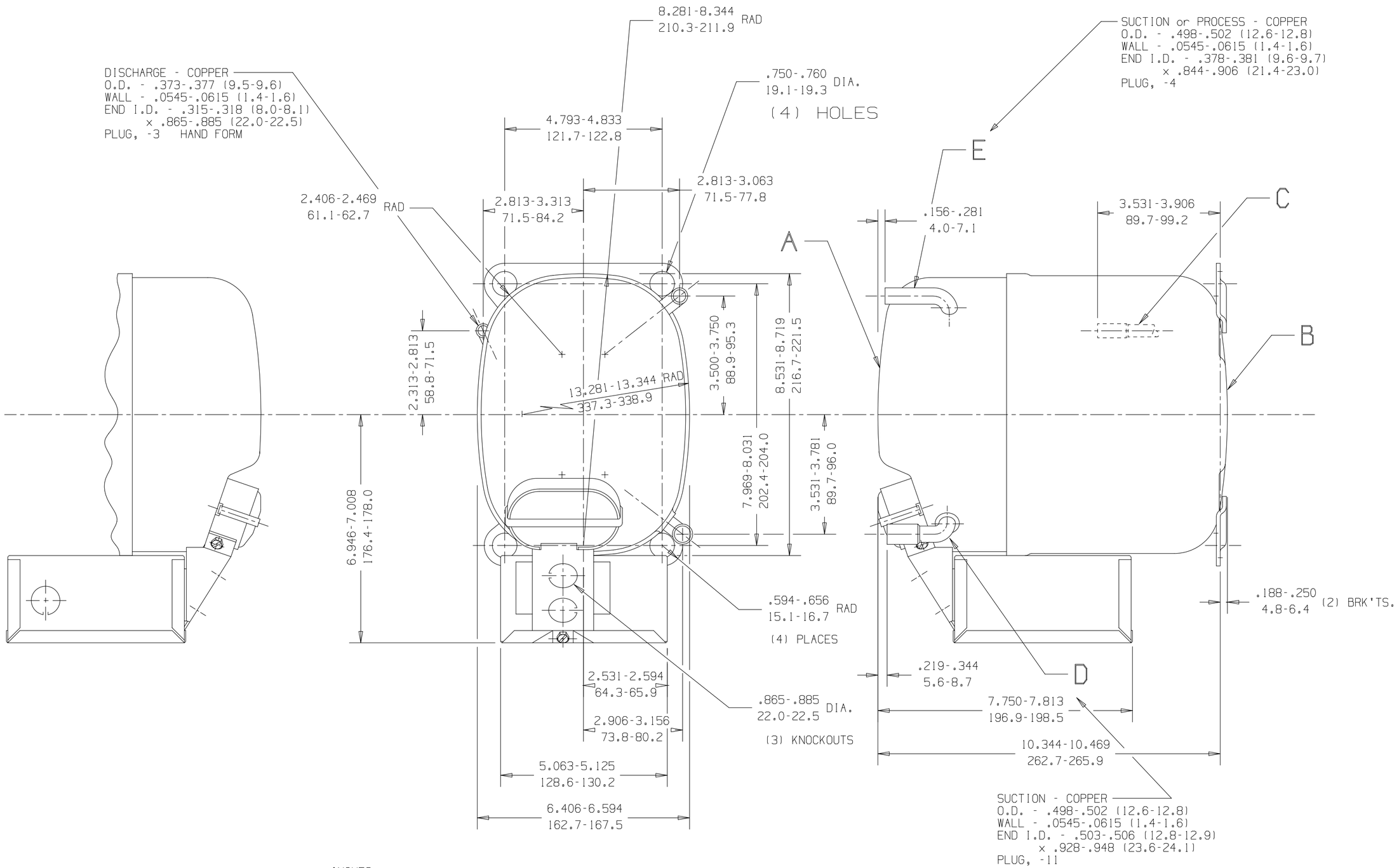

DIMENSIONING = INCHES / MILLIMETERS OR INCHES (MILLIMETERS)

NOTE!
1. IF SPECIFIED ON BILL OF MATERIAL ASSEMBLE THESE PARTS AS SHOWN.
2. SEE SPEC. "A-B" & "A-C" FOR PROCESSING.

NOTE!
1. SEE DWG. #AHT-1 FOR ASSEMBLY OF DISCHARGE CONNECTOR AND LOWER SHOCK LOOP IN LOWER HOUSING.

A	HA-635-12		N.L.C. 8-11-95	HB 12-4-87	
B	HA-634				
C	34366-1		#228106-1 REMOVED HA-536-107 & HA-535	REDRAWN - NO CHANGE #212377	
D	34367				
E	34372				
			6A	—	
			K	J	
			CHANGE	DATE	

(K)

LT LC

THIS DRAWING OR PRINT IS THE PROPERTY OF THE TECUMSEH PRODUCTS COMPANY (TECUMSEH) AND CONTAINS INFORMATION BELONGING TO TECUMSEH. IT IS LOANED TO THE RECIPIENT FOR THE EXPRESS AND SPECIFIC CONDITION THAT NEITHER IT NOR THE INFORMATION CONTAINED THEREON OR DISCLOSED THEREIN SHALL BE REPRODUCED, COPIED, LOANED TO OTHERS WITHOUT THE EXPRESS AND SPECIFIC WRITTEN CONSENT OF TECUMSEH AND THAT CONSENT OF TECUMSEH ONLY AS EXPRESSLY AND SPECIFICALLY AUTHORIZED IN WRITING IS GRANTED AND NOT OTHERWISE. (ii) SHALL NOT BE USED IN ANY MANNER OR TO ANY EXTENT WITHOUT TECUMSEH'S PRIOR EXPRESS AND SPECIFIC WRITTEN CONSENT. (iii) SHALL BE RETURNED BY THE RECIPIENT TO TECUMSEH IMMEDIATELY UPON LATTER'S REQUEST PROMPTLY AFTER SUCH REQUEST IS MADE.

DIS.CODE

DO NOT SCALE THIS DRAWING. ALL FERROUS MATERIALS MUST NOT BE MAGNETIZED AS RECEIVED FOR ASSEMBLY. COMPRESSOR ASSEMBLY.

NAME: SALES COMPRESSOR

DWN. BRODERICK 12-4-87 | CK

THIS PRINT SUPERSEDES ALL PRINTS PRIOR TO

TECUMSEH PRODUCTS CO.
TECUMSEH, MICHIGAN

MATERIAL

INTERNAL USE ONLY
p:\reeves\aj\aj-dcaj205_k-c.prt

PART NO. DCAJ-205

AJ

Q.A. SYMBOLS
✱ = CATEGORY I
▲ = CATEGORY II
▨ = CATEGORY III
= CATEGORY IV