DRAWING NO. DEAJ8

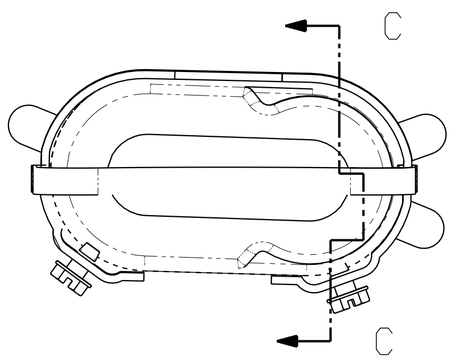


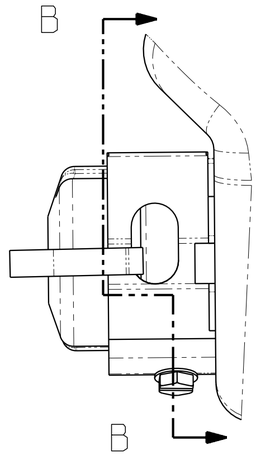


WARNING- WIRING DIAGRAM MUST BE FOLLOWED AS SHOWN. ANY MISWIRING CAN CAUSE SERIOUS ELECTRICAL HAZARD AND POTENTIAL DAMAGE OR RUPTURE OF COMPONENT ELECTRICAL PARTS.

## PSC HOOK-UP

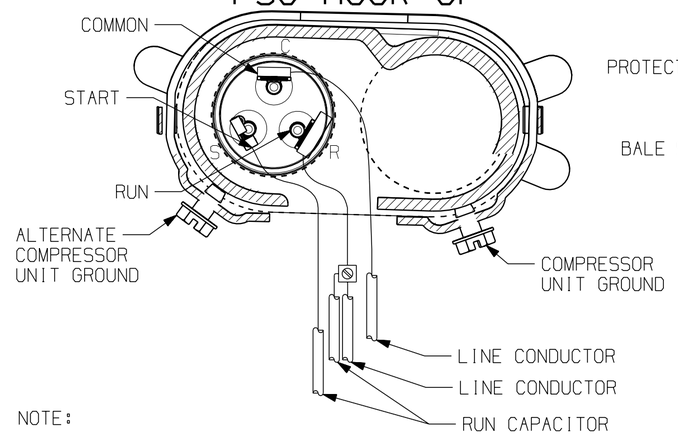


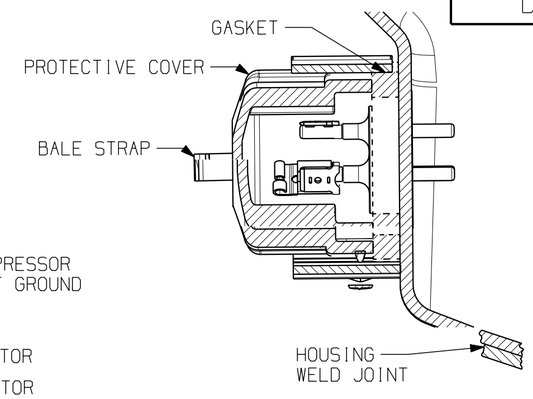


ALTERNATE C-C

NOTE:

1. ASSEMBLE PARTS AS SHOWN IF SPECIFIED ON B/M.
2. IDENTIFIED CONNDUCTOR MAY BE WHITE OR RIBBED (115 VOLT ONLY - NEUTRAL).
3. IF TWO RUN CAPACITORS ARE REQUIRED HOOK-UP AS SHOWN.

ALTERNATE B-B

WARNING- WIRING DIAGRAM MUST BE FOLLOWED AS SHOWN. ANY MISWIRING CAN CAUSE SERIOUS ELECTRICAL HAZARD AND POTENTIAL DAMAGE OR RUPTURE OF COMPONENT ELECTRICAL PARTS.

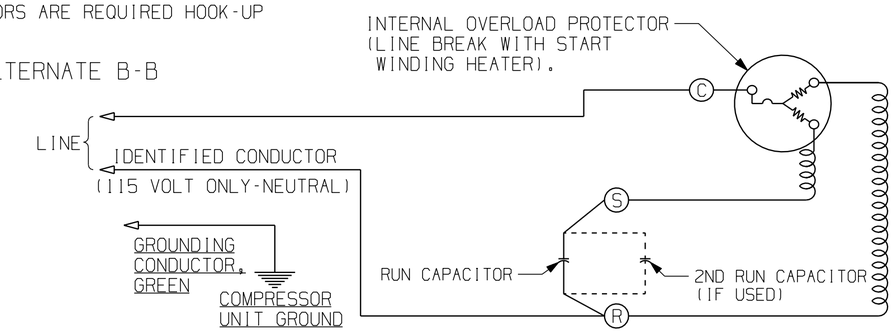


115 OR 230 VOLT-SCHEMATIC WIRING DIAGRAM-PSC-INTERNAL OVERLOAD PROTECTOR (LINE BREAK)-START WINDING HEATER. (REF. DWG. MD472-33)

## CRS HOOK-UP

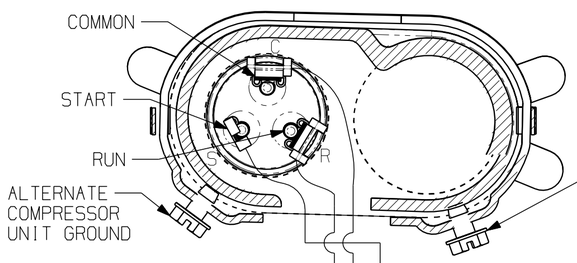


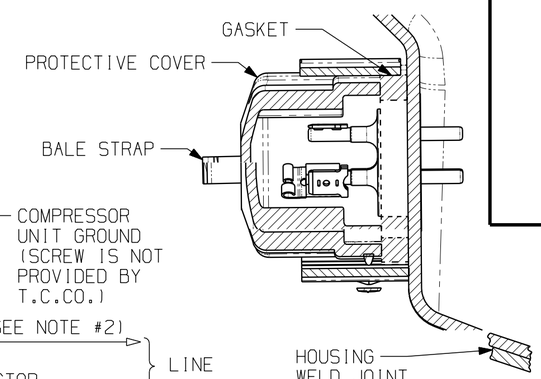


SECTION C-C

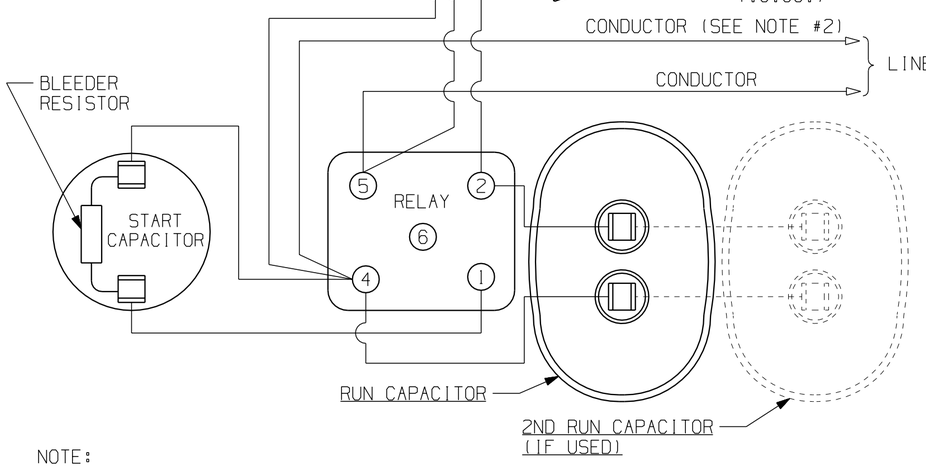


NOTE:

1. ASSEMBLE PARTS AS SHOWN IF SPECIFIED ON B/M.
2. IDENTIFIED CONNDUCTOR MAY BE WHITE OR RIBBED (115 VOLT ONLY - NEUTRAL).
3. IF TWO RUN CAPACITORS ARE REQUIRED HOOK-UP AS SHOWN.

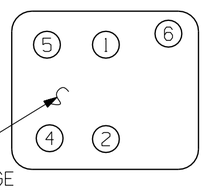


ALTERNATE RELAY HOOK-UP DOES NOT CHANGE WHEN THIS RELAY IS USED.

SECTION B-B




ALTERNATE NUMBER LOCATION

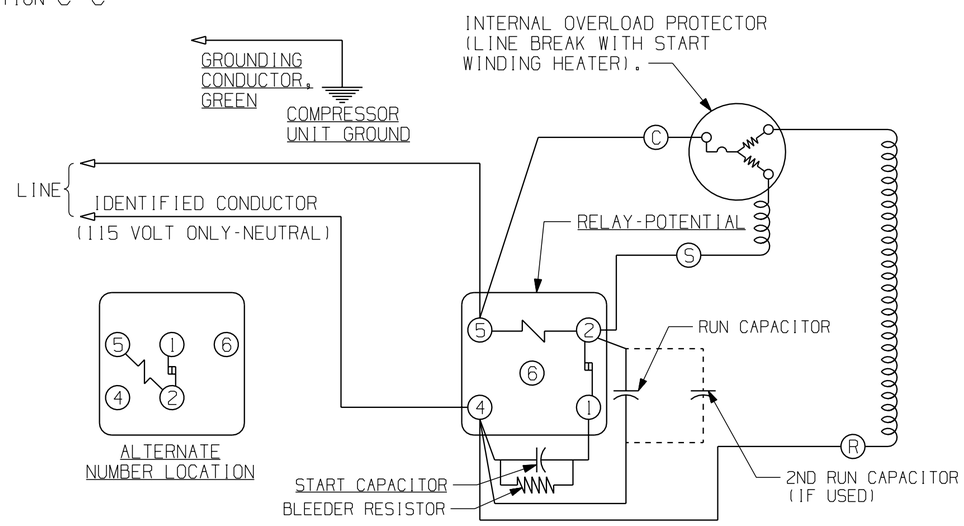


115 OR 230 V. - SCHEMATIC WIRING DIAGRAM - CSR OR CSR START CAPACITOR ASSIST - INTERNAL OVERLOAD PROTECTOR (LINE BREAK) - START WINDING HEATER. (REF. DWG. MD472-34)

ENGLISH

Q.A. SYMBOLS
☆ = CATEGORY I
△ = CATEGORY II
□ = CATEGORY III
= CATEGORY IV

AJ

| LT | LC | CHANGE | DATE |
|---|---|---|---|
| B | : | #244142-000 REDRAWN & REVISED ORIENTATION OF LEAD WIRE. | 1 |

THIS DRAWING OR PRINT (1) IS THE PROPERTY OF TECUMSEH PRODUCTS COMPANY (TECUMSEH) AND CONTAINS PROPRIETARY AND CONFIDENTIAL INFORMATION OF TECUMSEH. (2) THIS DRAWING OR PRINT IS MADE AVAILABLE TO THE RECIPIENT ON THE EXPRESS AND IMPLIED CONDITION THAT NEITHER IT NOR THE INFORMATION CONTAINED THEREIN WILL BE DISCLOSED TO SMALL OTHERS WITHOUT THE EXPRESS AND SPECIFIC WRITTEN CONSENT OF TECUMSEH AND THAT SUCH INFORMATION WILL NOT BE USED EXCLUSIVELY IN A MANNER OR TO ANY EXTENT WITHOUT SPECIFIC WRITTEN CONSENT AND AND NOTHERWISE (1)(2) SHALL BE RETURNED BY THE RECIPIENT SHALL BE RETURNED BY THE RECIPIENT LATTER'S REQUEST PROMPTLY AFTER SUCH REQUEST IS MADE.

DIS.CODE

NAME: ELECTRICAL HOOKUP

SCALE: 1:1 & NOTED

THIS PRINT SUPERSEDES ALL PRINTS PRIOR TO

TECUMSEH PRODUCTS CO.
TECUMSEH, MICHIGAN

DRAWING NO. DEAJ8

MATERIAL: NOTED

DO NOT SCALE THIS DRAWING. ALL FERROUS MATERIALS MUST NOT BE MAGNETIZED AS A RESULT OF THE COMPRESSOR ASSEMBLY.

DRAWING No. MD888-08

REVISION LEVEL: REL

BANNER User: ecrook Part/Rev: aj-deaj8_b-c.prt Date: 19-May-06 Time: 08:26