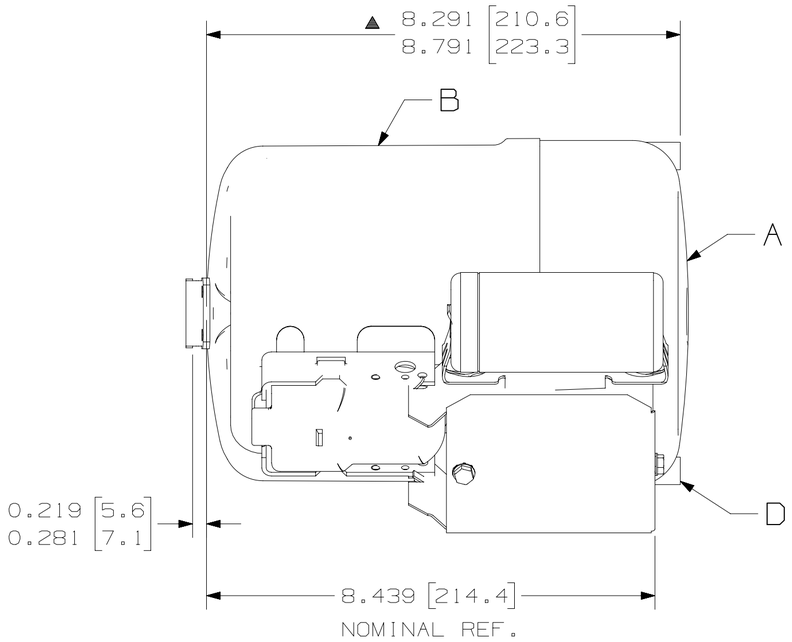

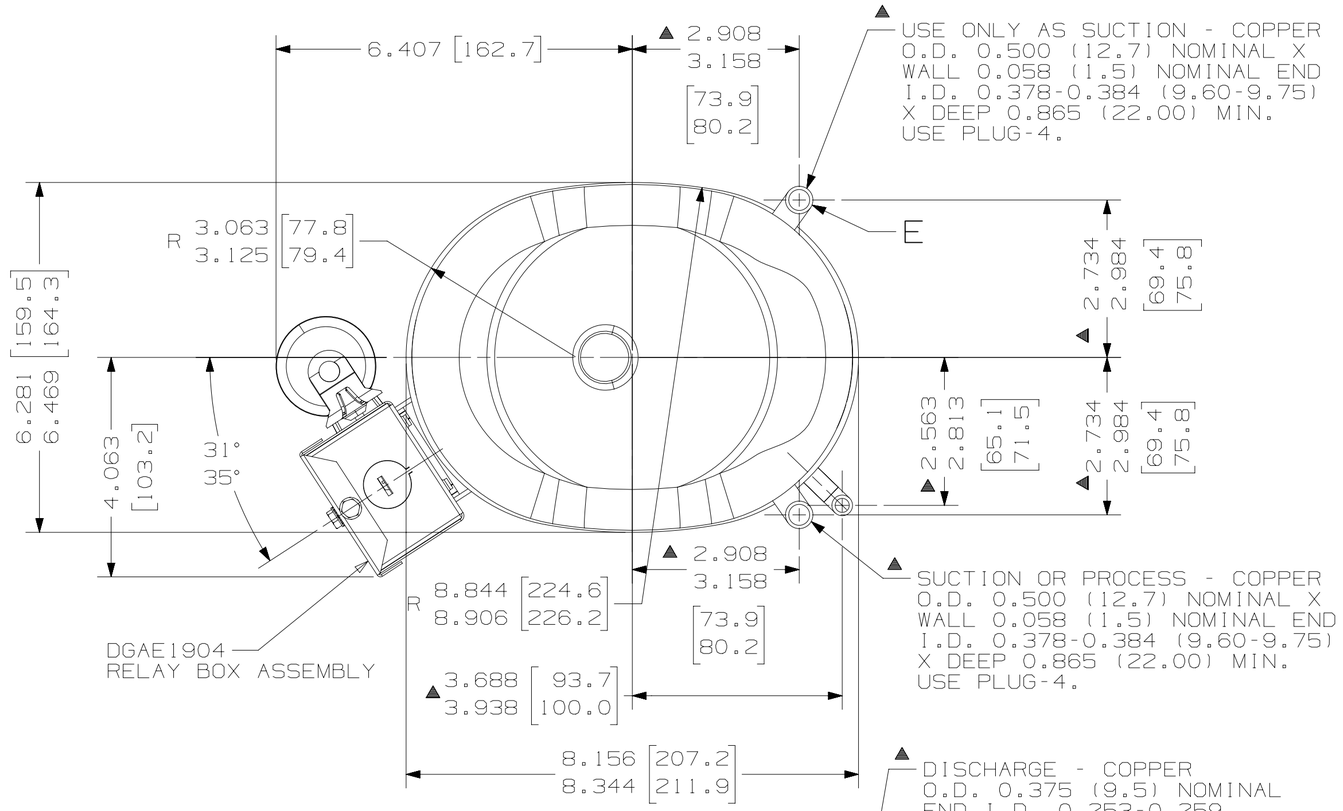

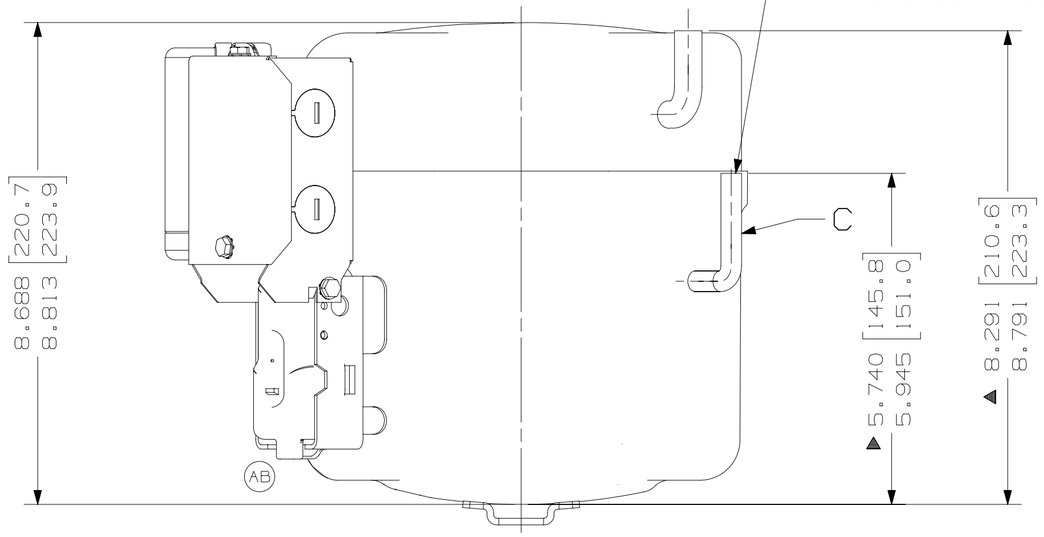

ITEM	PART NUMBER
A	AKU1001
B	AKL1013
C	34525
D	34439
E	34439

NOTES

1- IF SPECIFIED ON BILL OF MATERIAL ASSEMBLE THE COMPONENTS AS SHOW.

2- SEE COMPONENT DRAWINGS FOR DIMENTIONS NOT SHOW.

▲ 3- MUST COMPLY WITH TECUMSEH GLOBAL ESPEC-8.

DIMENSIONING= INCHES OR INCHES - [MILLIMETERS]
MILLIMETERS

		EC102901 17-02-22 GM. MS.	EC95407 09-11-20 JG. C.	DATE
		ALTERADO PROTETOR DE TERMINAIS ERA: 108-10072	LIBERACAO	CHANGE
		B3	--	LC
		AB	AA	LT

THIS DRAWING OR PRINT (I) IS THE PROPERTY OF TECUMSEH DO BRASIL LTDA. AND CONTAINS PROPRIETARY AND CONFIDENTIAL INFORMATION BELONGING TO TECUMSEH DO BRASIL. (II) IS MADE AVAILABLE TO THE RECIPIENT ON THE EXPRESS AND SPECIFIC CONDITION THAT NEITHER IT NOR THE INFORMATION CONTAINED THEREON OR DISCLOSED OR MADE AVAILABLE TO OTHERS WITHOUT THE EXPRESS AND SPECIFIC WRITTEN CONSENT OF TECUMSEH DO BRASIL AND THAT SUCH INFORMATION ONLY AS EXPRESSLY AND SPECIFICALLY APPROVED IN WRITING BY TECUMSEH DO BRASIL AND NOT OTHERWISE. (III) SHALL NOT BE COPIED OR TO ANY EXTENT WITHOUT TECUMSEH DO BRASIL PRIOR EXPRESS AND SPECIFIC WRITTEN CONSENT AND (IV) SHALL BE RETURNED BY THE RECIPIENT WITHIN 14 DAYS REQUEST PROMPTLY AFTER SUCH REQUEST IS MADE.

DO NOT SCALE THIS DRAWING. ALL FERROUS MATERIALS MUST NOT BE MAGNETIZED AS RECEIVED OR AT COMPRESSOR ASSEMBLY

THIRD ANGLE PROJECTION

UNITS: mm

DRAWING SIZE: A2

O. A.SYMBOLS AS PROCEDURE 2.01.031 TECUMSEH OF BRAZIL

★ : CATEGORY I
▲ : CATEGORY II
■ : CATEGORY III
: CATEGORY IV

Tecumseh

NAME	PART NO.
SALES COMPRESSOR	DCAK004
	SCALE 1:2 / PAGE 1/1
DATE 21-04-20 / REF.	FAMILY AK