DRAWING NO.
DCAK037B

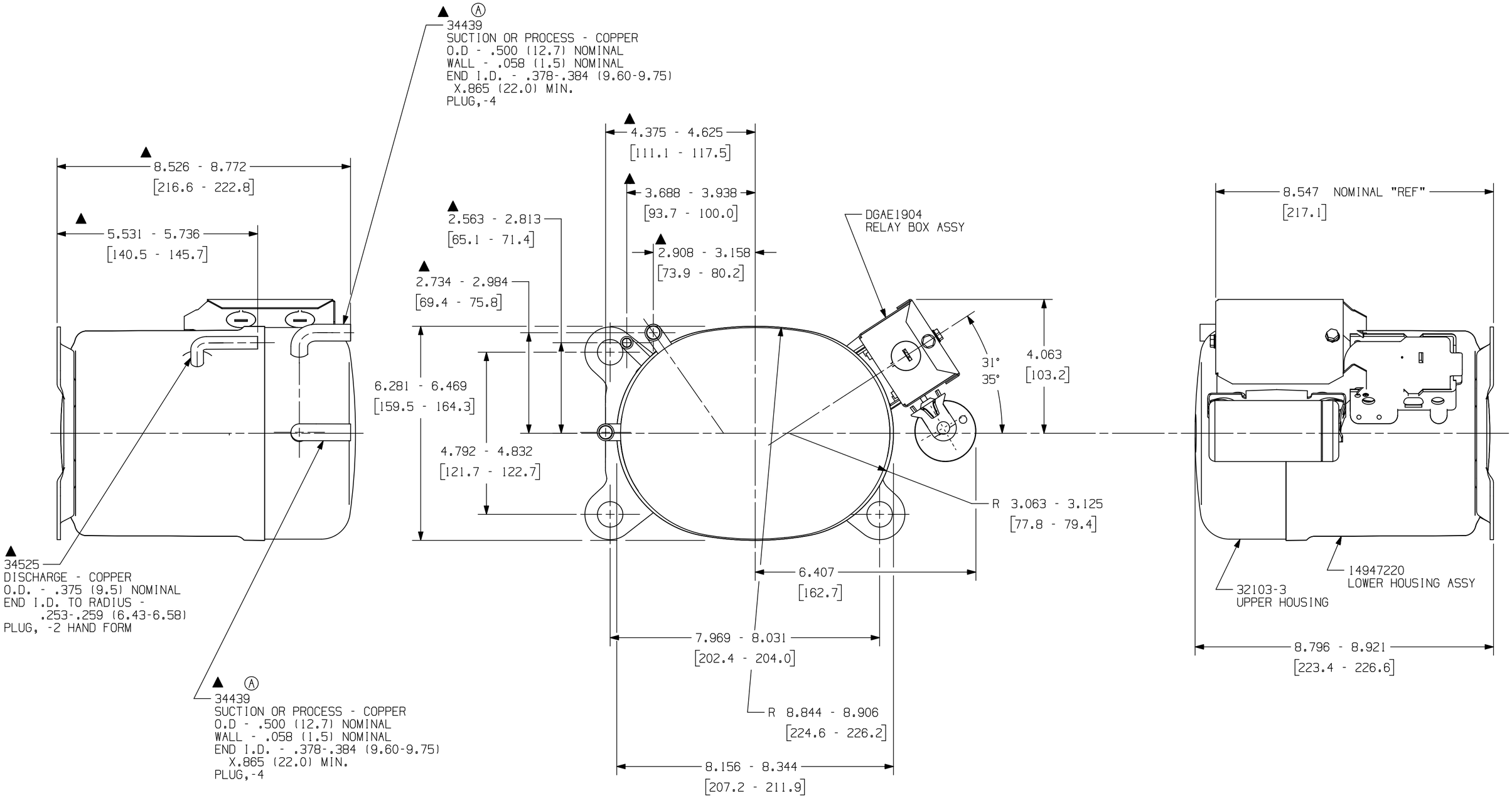

NOTE:

1. IF SPECIFIED ON BILL OF MATERIAL, ASSEMBLE THESE PARTS AS SHOWN.
2. SEE COMPONENT DRAWINGS FOR DIMENTIONS NOT SHOWN.
3. MUST COMPLY WITH T.P.CO. GLOBAL SPEC 08.

DIMENSIONS= INCHES / MILLIMETERS OR INCHES-(MILLIMETERS)

3D,VNX8

ENGLISH

Q.A. SYMBOLS
- ✱ = CATEGORY I
- ▲ = CATEGORY II
- ■ = CATEGORY III
- = CATEGORY IV

AK

REL	LT	CHANGE	DATE
A	6F 7C	EC75011 NOTE UPDATED	TS 01NOV16
		EC59543	—

THIS DRAWING OR PRINT (1) IS THE PROPERTY OF TECUMSEH PRODUCTS COMPANY (TECUMSEH) AND CONTAINS PROPRIETARY AND CONFIDENTIAL INFORMATION BELONGING TO TECUMSEH. (II) IS MADE AVAILABLE TO THE RECIPIENT ON THE EXPRESS AND SPECIFIC CONDITION THAT NEITHER IT NOR THE INFORMATION CONTAINED THEREON OR DISCLOSED THEREIN SHALL BE DISCLOSED OR MADE AVAILABLE TO OTHERS WITHOUT THE EXPRESS AND SPECIFIC WRITTEN CONSENT OF TECUMSEH AND THAT SUCH INFORMATION ONLY AS EXPRESSLY AND SPECIFICALLY APPROVED IN WRITING BY TECUMSEH AND NOT OTHERWISE. (III) SHALL NOT BE COPIED OR DUPLICATED IN ANY MANNER OR TO ANY EXTENT WITHOUT TECUMSEH'S PRIOR EXPRESS AND SPECIFIC WRITTEN CONSENT AND (IV) SHALL BE RETURNED BY THE RECIPIENT THEREOF TO TECUMSEH AT THE LATTER'S REQUEST PROMPTLY AFTER SUCH REQUEST IS MADE.

DO NOT SCALE THIS DRAWING ALL FERROUS MATERIALS MUST NOT BE MAGNETIZED AS RECEIVED OR AT COMPRESSOR ASSEMBLY.

DIS.CODE -

NAME: SALES COMPRESSOR

SCALE: 1:2

THIS PRINT SUPERSEDES ALL PRINTS PRIOR TO

TECUMSEH PRODUCTS CO.
ANN ARBOR, MICHIGAN

MATERIAL: NOTED

DRAWING NO. DCAK037B

BANNER