DRAWING NO. DCAK037

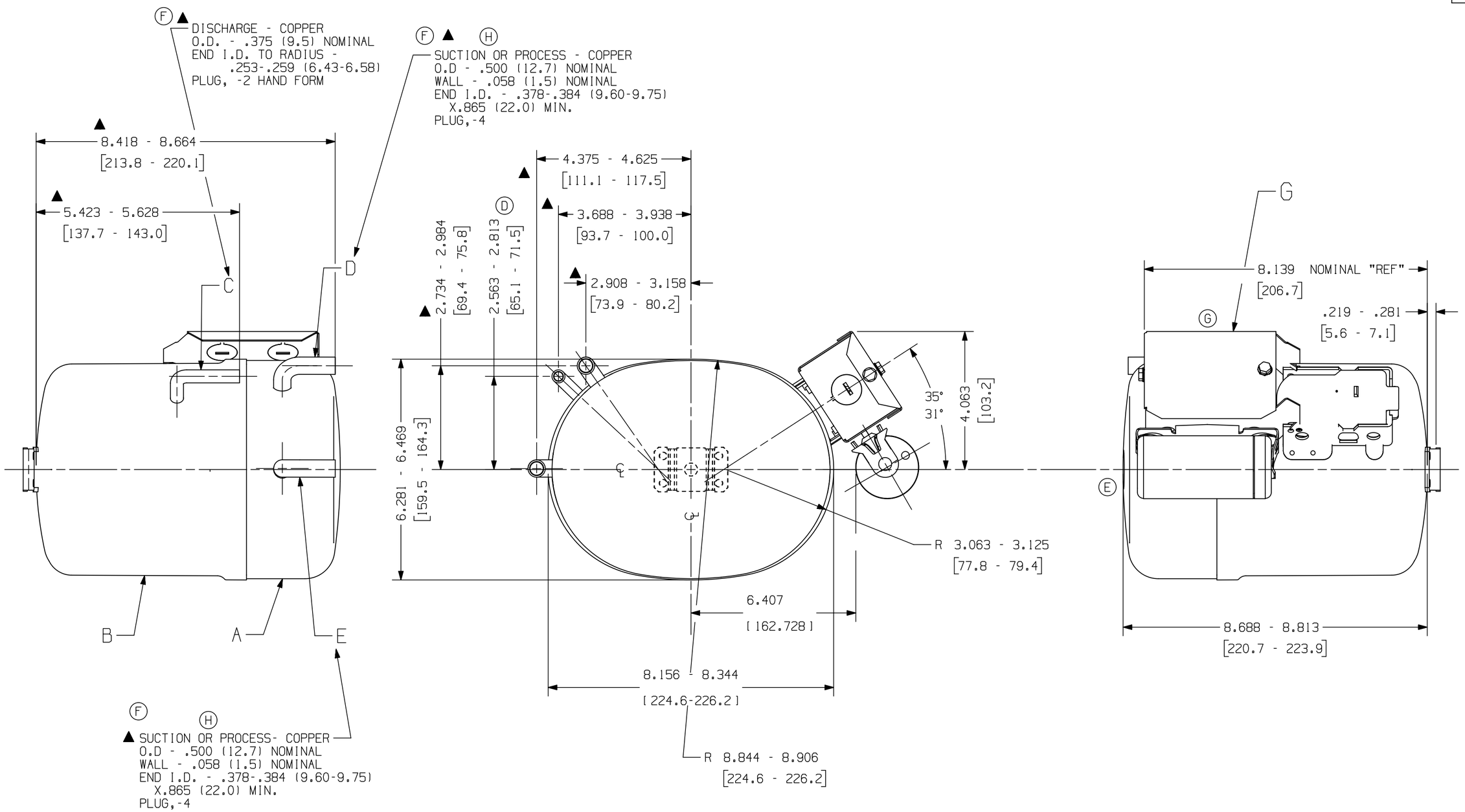

MANUFACTURING NOTES!
1. SEE SPEC. "A-B" & "A-C" FOR PROCESSING.

NOTE!

1. IF SPECIFIED ON BILL OF MATERIAL ASSEMBLE THESE PARTS AS SHOWN.
▲ 2. MUST COMPLY WITH T.P.Co. GLOBAL SPEC. 08.

DIMENSIONS= INCHES / MILLIMETERS OR INCHES-(MILLIMETERS)

		A	32103-3	
G	DGAE1904	B	HA588-2	
		C	34525	
		D	34439	
		E	34439	

3D, VNX6

ENGLISH

Q.A. SYMBOLS
✱ = CATEGORY I
▲ = CATEGORY II
■ = CATEGORY III
= CATEGORY IV

AK

LT	LC	CHANGE	DATE
H	6F 7C	EC75011 NOTE UPDATED	TS 01NOV16
G	—	EC29368 RELAY BOX UPDATED ADDED GLOBAL SPEC. 08	TS 18JUN12
F	—	#234874 REVISD TUBE TOLERANCES	NLD 9/12/95
E	—	#234295 REMOVED CAPACITOR CLIP	SJS 4/18/96
D	—	#234330 ADDED DIM	HMB 9/26/92
C	—	26070 SPRING CLIP REMOVED #226219	HMB 9/26/92
B	—	28677-1 BASE PLATE REMOVED #226219	HMB 9/26/92
A	—	RE DRAWN & RE-RELEASED #226219	HMB 9/26/92
REL	—	#225002	—

THIS DRAWING OR PRINT (I) IS THE PROPERTY OF TECUMSEH PRODUCTS COMPANY (TECUMSEH) AND CONTAINS PROPRIETARY AND CONFIDENTIAL INFORMATION BELONGING TO TECUMSEH. (II) IS MADE AVAILABLE TO THE RECIPIENT ON THE EXPRESS AND SPECIFIC CONDITION THAT NEITHER IT NOR THE INFORMATION CONTAINED THEREON OR DISCLOSED THEREIN SHALL BE DISCLOSED OR MADE AVAILABLE TO OTHERS WITHOUT THE EXPRESS AND SPECIFIC WRITTEN CONSENT OF TECUMSEH AND THAT SUCH INFORMATION ONLY AS EXPRESSLY AND SPECIFICALLY APPROVED IN WRITING BY TECUMSEH AND NOT OTHERWISE. (III) SHALL NOT BE COPIED OR DUPLICATED IN ANY MANNER OR TO ANY EXTENT WITHOUT TECUMSEH'S PRIOR EXPRESS AND SPECIFIC WRITTEN CONSENT AND (IV) SHALL BE RETURNED BY THE RECIPIENT THEREOF TO TECUMSEH AT THE LATTER'S REQUEST PROMPTLY AFTER SUCH REQUEST IS MADE.

DO NOT SCALE THIS DRAWING ALL FERROUS MATERIALS MUST NOT BE MAGNETIZED AS RECEIVED OR AT COMPRESSOR ASSEMBLY.

DIS.CODE 34D

NAME SALES COMPRESSOR

SCALE 1/2"=1

THIS PRINT SUPERSEDES ALL PRINTS PRIOR TO

TECUMSEH PRODUCTS CO.
ANN ARBOR, MICHIGAN

MATERIAL

DRAWING NO. DCAK037

BANNER