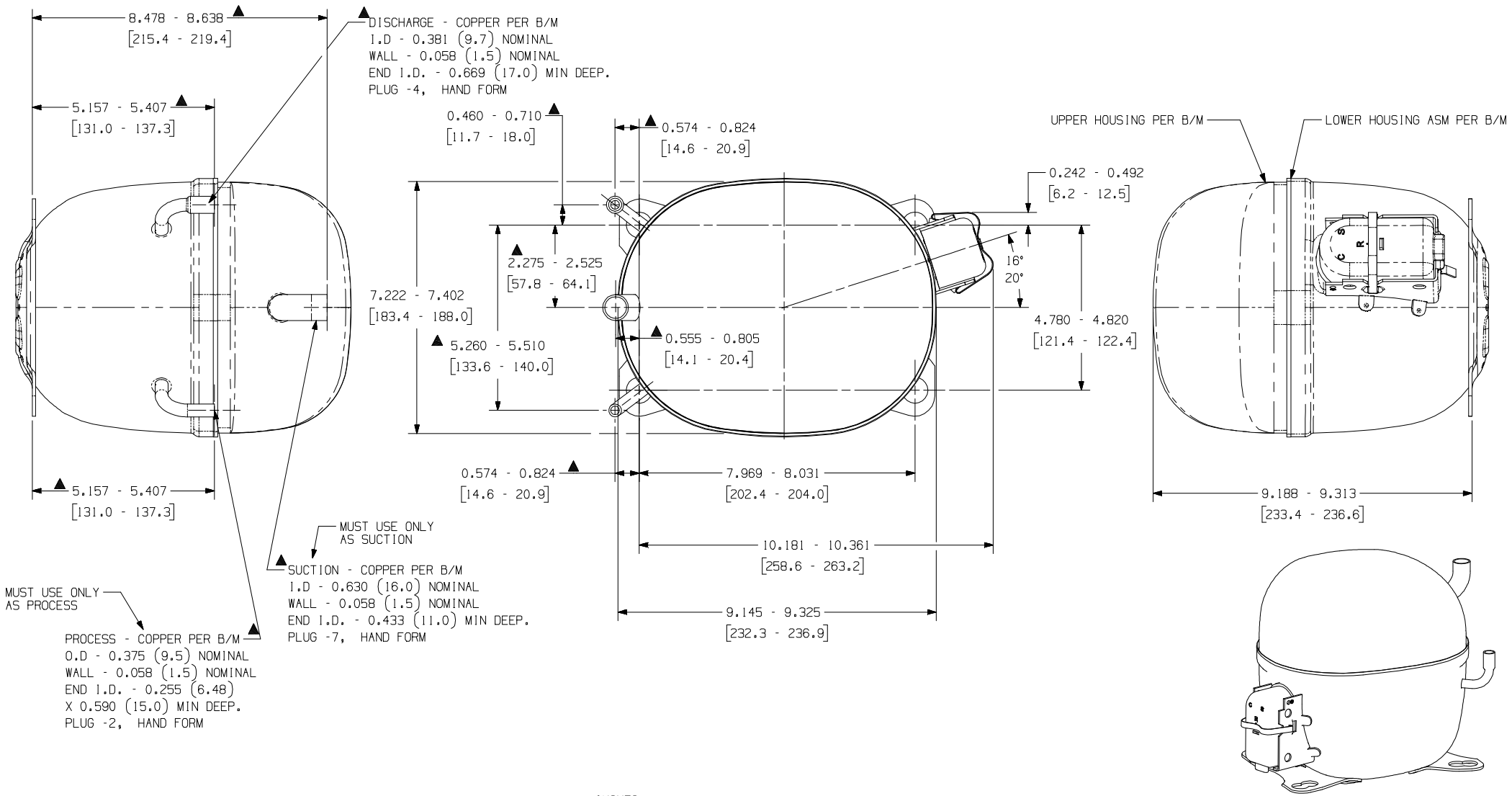


DIMENSIONS: INCHES OR INCHES-[MILLIMETERS]
[MILLIMETERS]

NOTE:

1. IF SPECIFIED ON BILL OF MATERIAL, ASSEMBLE THESE PARTS AS SHOWN.
2. SEE COMPONENT DRAWINGS FOR DIMENSIONS NOT SHOWN.
▲ 3. MUST COMPLY WITH TECUMSEH GLOBAL SPEC 08.

| LT | LC | CHANGE | DATE |
|---|---|---|---|
| AA | -- | LIBERACAO | EC96579 16-11-20 PS. MS. |

THIS DRAWING OR PRINT (1) IS THE PROPERTY OF TECUMSEH DO BRASIL LTDA. AND CONTAINS PROPRIETARY AND CONFIDENTIAL INFORMATION BELONGING TO TECUMSEH DO BRASIL. (11) IS LOANED TO THE RECIPIENT FOR AN INDEFINITE PERIOD AND IS SUBJECT TO THE RECIPIENT'S EXPRESS AND SPECIFIC CONDITION THAT NEITHER IT NOR THE INFORMATION CONTAINED THEREIN OR DISCLOSED OR MADE AVAILABLE TO OTHERS WITHOUT THE EXPRESS AND SPECIFIC WRITTEN CONSENT OF TECUMSEH DO BRASIL AND THAT SUCH INFORMATION ONLY AS EXPRESSLY AUTHORIZED BY THE CONSENT WRITTEN BY TECUMSEH DO BRASIL AND NOT OTHERWISE. (111) SHALL NOT BE COPIED OR TO ANY EXTENT WITHOUT TECUMSEH DO BRASIL PRIOR EXPRESS AND SPECIFIC WRITTEN CONSENT AND (IV) SHALL BE RETURNED BY THE RECIPIENT LATTER'S REQUEST PROMPTLY AFTER SUCH REQUEST IS MADE.

DO NOT SCALE THIS DRAWING. ALL FERROUS MATERIALS MUST NOT BE MAGNETIZED AS RECEIVED OR AT COMPRESSOR ASSEMBLY

THIRD ANGLE PROJECTION

UNITS: mm

DRAWING SIZE: A2

D. A.SYMBOLS AS PROCEDURE 2.01.031 TECUMSEH OF BRAZIL

★ : CATEGORY I
▲ : CATEGORY II
■ : CATEGORY III
: CATEGORY IV

Tecumseh

| NAME | PART NO. |
|---|---|
| SALES COMPRESSOR | DCAK107 |

| DWN. | CK. | APR. | SCALE | PAGE |
|---|---|---|---|---|
| PAULO | MARCIO | ANDRE | 1:2 | 1/1 |

| DATE | REF. | FAMILY |
|---|---|---|
| 15-07-20 | T.P.Co. DCAK107 IL.C. AI | AK2 |