ITEN	PART NUMBER
A	320-10678
B	320-10661
C	14947663
D	580-10244
E	580-10789

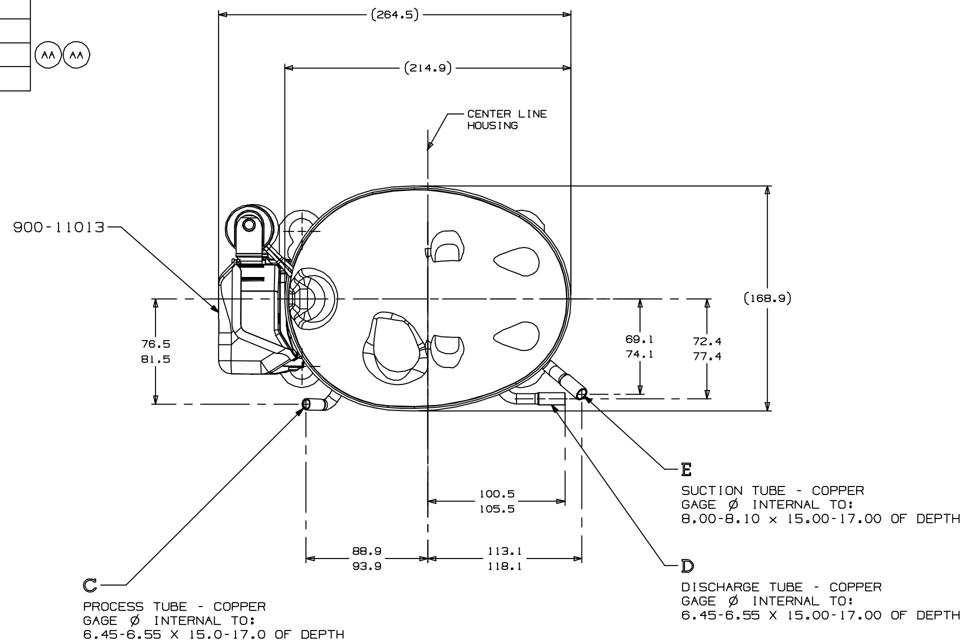

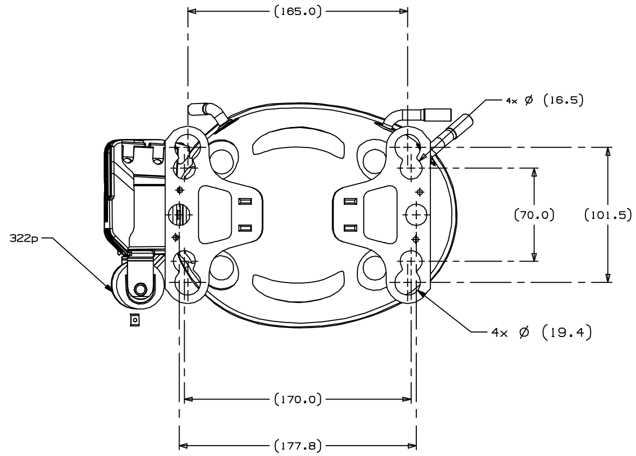

AUXILIARY VIEW
FIXING DIMENSIONS

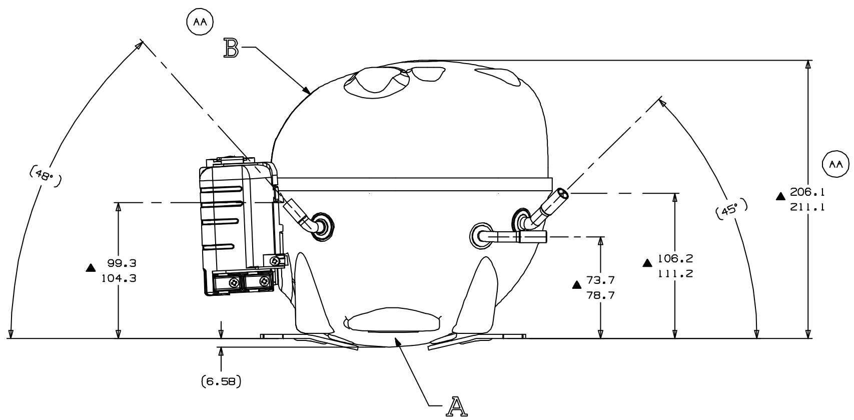

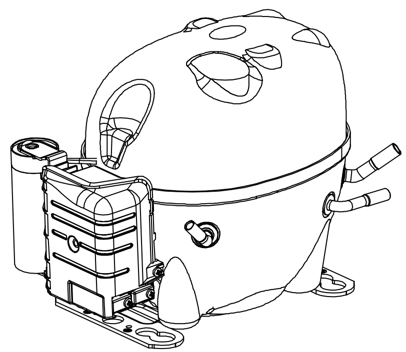

PERSPECTIVE VIEW
SCALE 1:2

NOTES:

1- IF SPECIFIED IN BM. ASSEMBLE PARTS AS SHOWN.
2- SEE SPEC. "A-B" & A-C FOR PROCESS.
3- THERE CAN BE NO CREASES IN THE TUBES (CREASES ARE SIGNS OR MARKS THAT ARE IN SOMETHING THAT BENDS).
4- AFTER THE FOLDS IN THE TUBES, CANNOT BE ACCELERATED TO AREA EXCEEDING 30%.
5- TUBES OF SUCTION, DISCHARGE AND PROCESS MUST BE FREE OF INK ON 15.8mm (5/8") FROM TOP OF THE TUBES AS SPEC. TECUMSEH A-84.
6- FOR SUPPLIER ENVIRONMENTAL REGULATORY REQUIREMENTS, SEE TECUMSEH GLOBAL SPEC-8.

THIRD ANGLE PROJECTION
UNITS: mm
DRAWING SIZE: A1

Tecumseh

NAME: SALES COMPRESSOR
PART NO.: DCAL003
DRN.: P&D
CK.: RAMIRO
APR.: ANDRE ZANATTA
SCALE: 1:3
PAGE: 1/1
DATE: 02-04-20
FAMILY: AL