ITEN	PART NUMBER
A	320-10668
B	320-10661
C	14947663
D	580-10244
E	580-10789

AA

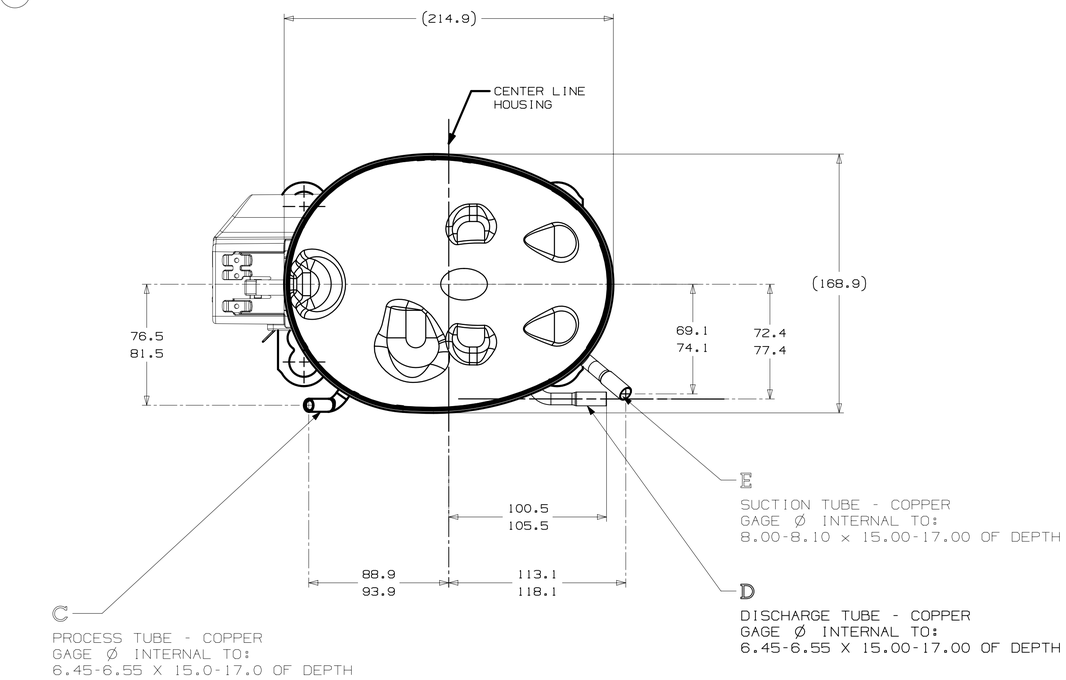

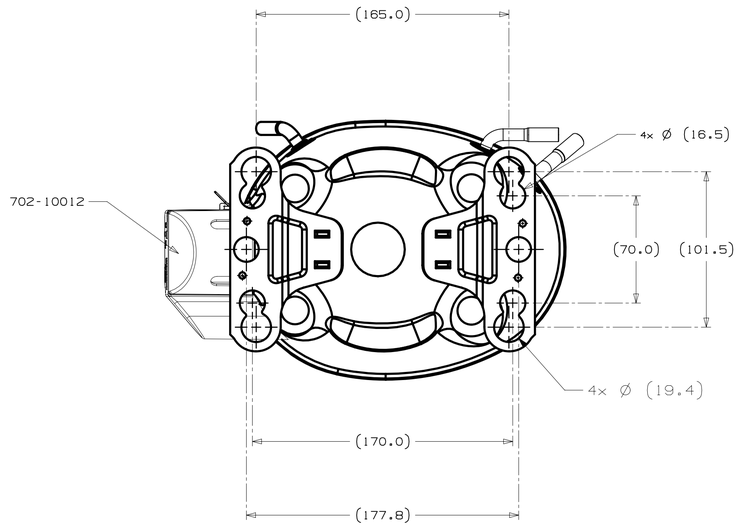

AUXILIARY VIEW
FIXING DIMENSIONS

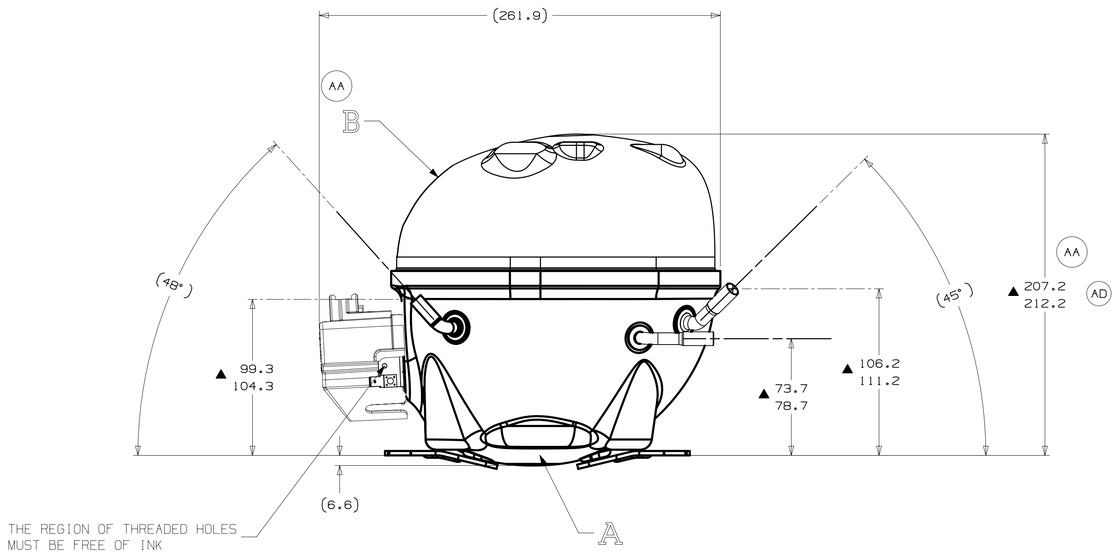

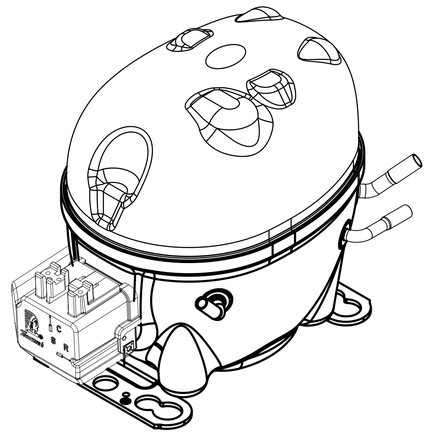

ISO
1:2

NOTES:

1- IF SPECIFIED IN BM. ASSEMBLE PARTS AS SHOWN.
2- SEE SPEC. "A-B" & A-C FOR PROCESS.
3- THERE CAN BE NO CREASES IN THE TUBES (CREASES ARE SIGNS OR MARKS THAT ARE IN SOMETHING THAT BENDS).
4- AFTER THE FOLDS IN THE TUBES, CANNOT BE ACCELERATED TO AREA EXCEEDING 30%.
5- TUBES OF SUCTION, DISCHARGE AND PROCESS MUST BE FREE OF INK ON 15.8 (5/8") FROM TOP OF THE TUBES AS SPEC. TECUMSEH A-B4.
6- FOR SUPPLIER ENVIRONMENTAL REGULATORY REQUIREMENTS, SEE TECUMSEH GLOBAL SPEC-8.

LT	LC	CHANGE	DATE
AD	C6	ERA 207.6 - 212.6	EC110253 16-JAN-25 CIAG. RG.
AC	- -	ALT. FENCE ERA: BR28608-0001 BR28608-0001A	EC107659 30-01-23 GM. HJ.
AB	- -	RETIRADO CAPACITOR DA CX L16(CAD)	EC100510 15-04-21 PS. C.
- -	- -	LIBERACAO	EC94857 18-01-21 AAC CSP
AA	D10	ATUALIZADO DESENHO VER DESCRIÇÃO DA TAMPA	
	C6	ALTERADO DIMENSÃO ERA 204.6-209.6	
	G10	ALTER.TUBO DE DESCARGA ERA 589-10781 SOL.TÉCNICA MASTR. PARA VOLTAR A CONDICAO INICIAL	

THIS DRAWING OF PRINT (1) IS THE PROPERTY OF TECUMSEH PRODUCTS COMPANY AND IS PROPRIETARY AND CONFIDENTIAL INFORMATION BELONGING TO TECUMSEH DO BRASIL. (11) IS LOANED AND ACCEPTED BY RECIPIENT SUBJECT TO THE EXPRESS AND SPECIFIC CONDITION THAT NEITHER IT NOR THE INFORMATION CONTAINED THEREON OR THE INFORMATION AVAILABLE TO THE RECIPIENT THROUGH THE USE THEREOF TO OTHERS WITHOUT THE EXPRESS AND SPECIFIC WRITTEN CONSENT OF TECUMSEH DO BRASIL. (111) THAT SUCH INFORMATION (ONLY AS EXPRESSLY PRESCRIBED BY WRITTEN CONSENT OF TECUMSEH DO BRASIL) (IV) THAT THE RECIPIENT, UPON TECUMSEH DO BRASIL'S REQUEST RETURNED BY THE RECIPIENT, UPON TECUMSEH DO BRASIL'S REQUEST.

DO NOT SCALE THIS DRAWING. ALL TEC-ROUE MATERIALS MUST NOT BE MARKETIZED AS RECEIVED OR AT COMPRESSOR ASSEMBLY.

THIRD ANGLE PROJECTION

UNITS: mm

DRAWING SIZE: A1

D. A.SYMBOLS AS PROCEDURE 2.01.031 TECUMSEH OF BRAZIL

★ : CATEGORY I
▲ : CATEGORY II
■ : CATEGORY III
: CATEGORY IV

Tecumseh

NAME	PART NO.
SALES COMPRESSOR	DCAL004
	SCALE 1:3 / PAGE 1/1
DATE 14-07-20 / REF.	FAMILY AL