ITEN	PART NUMBER
A	320-10678
B	320-10661
C	14947663
D	580-10244
E	580-10789

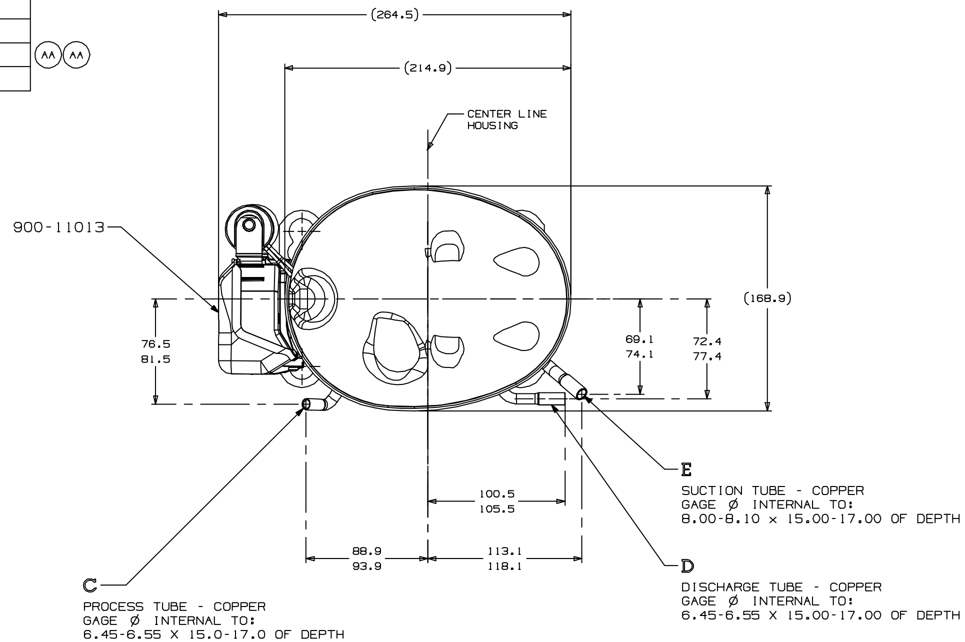

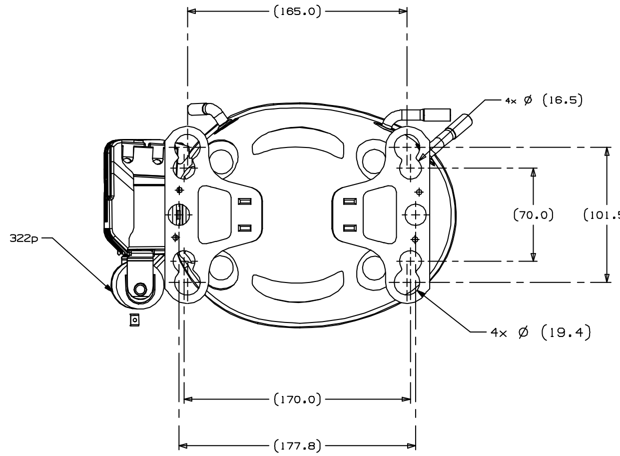

AUXILIARY VIEW

FIXING DIMENSIONS

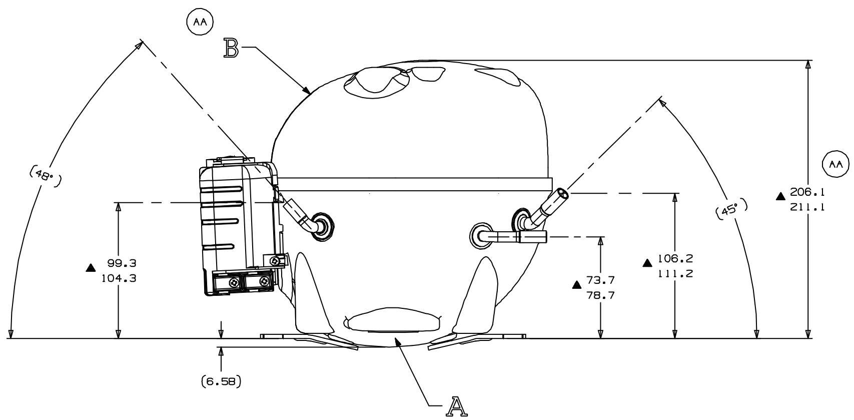

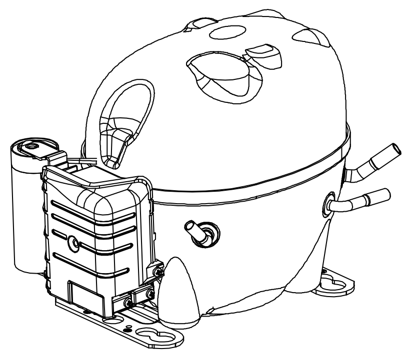

PERSPECTIVE VIEW

SCALE 1:2

NOTES:

1- IF SPECIFIED IN BM. ASSEMBLE PARTS AS SHOWN.
2- SEE SPEC. "A-B" & A-C FOR PROCESS.
3- THERE CAN BE NO CREASES IN THE TUBES (CREASES ARE SIGNS OR MARKS THAT ARE IN SOMETHING THAT BENDS).
4- AFTER THE FOLDS IN THE TUBES, CANNOT BE ACCELERATED TO AREA EXCEEDING 30%.
5- TUBES OF SUCTION, DISCHARGE AND PROCESS MUST BE FREE OF INK ON 15.8mm (5/8") FROM TOP OF THE TUBES AS SPEC. TECUMSEH A-B4.
6- FOR SUPPLIER ENVIRONMENTAL REGULATORY REQUIREMENTS, SEE TECUMSEH GLOBAL SPEC-8.

LT	LC	CHANGE	DATE
-	-	LIBERACAO	
D10		ATUALIZADO DESENHO VER DESENHO DA TAMPA	
C6		ALTERADO DIMENSAO ERA 204,6-209,6	
G10		ALTER. TUBO DE DESCARGA ERA 580-10790 SOLIC. ENG. INDUSTR. PARA VOLTAR A CONDICAO INICIAL	EC94857 18-01-21 AAC CSP
G10		ALTER. TUBO DE DESCARGA ITEM "D" DA TABELA ERA 580-10244 SOLIC. ENG. INDUSTRIAL	

DO NOT SCALE THIS DRAWING. ALL FERROUS MATERIALS MUST NOT BE MAGNETIZED AS RECEIVED OR AT COMPRESSOR ASSEMBLY.

THIRD ANGLE PROJECTION

UNITS: mm

DRAWING SIZE: A1

Q. A.SYMBOLS AS PROCEDURE 2.01.031 TECUMSEH OF BRAZIL
- ★ = CATEGORY I
- ▲ = CATEGORY II
- ■ = CATEGORY III
- = CATEGORY IV

Tecumseh

NAME			PART NO.	
SALES COMPRESSOR			DCAL003	
DWN. P&D	CK. RAMIRO	APR. ANDRE ZANATTA	SCALE 1:3	PAGE 1/1
DATE 02-04-20	REF.		FAMILY AL	