ITEN	PART NUMBER
A	320-10681
B	320-10661
C	14947663
D	580-10244
E	580-10789

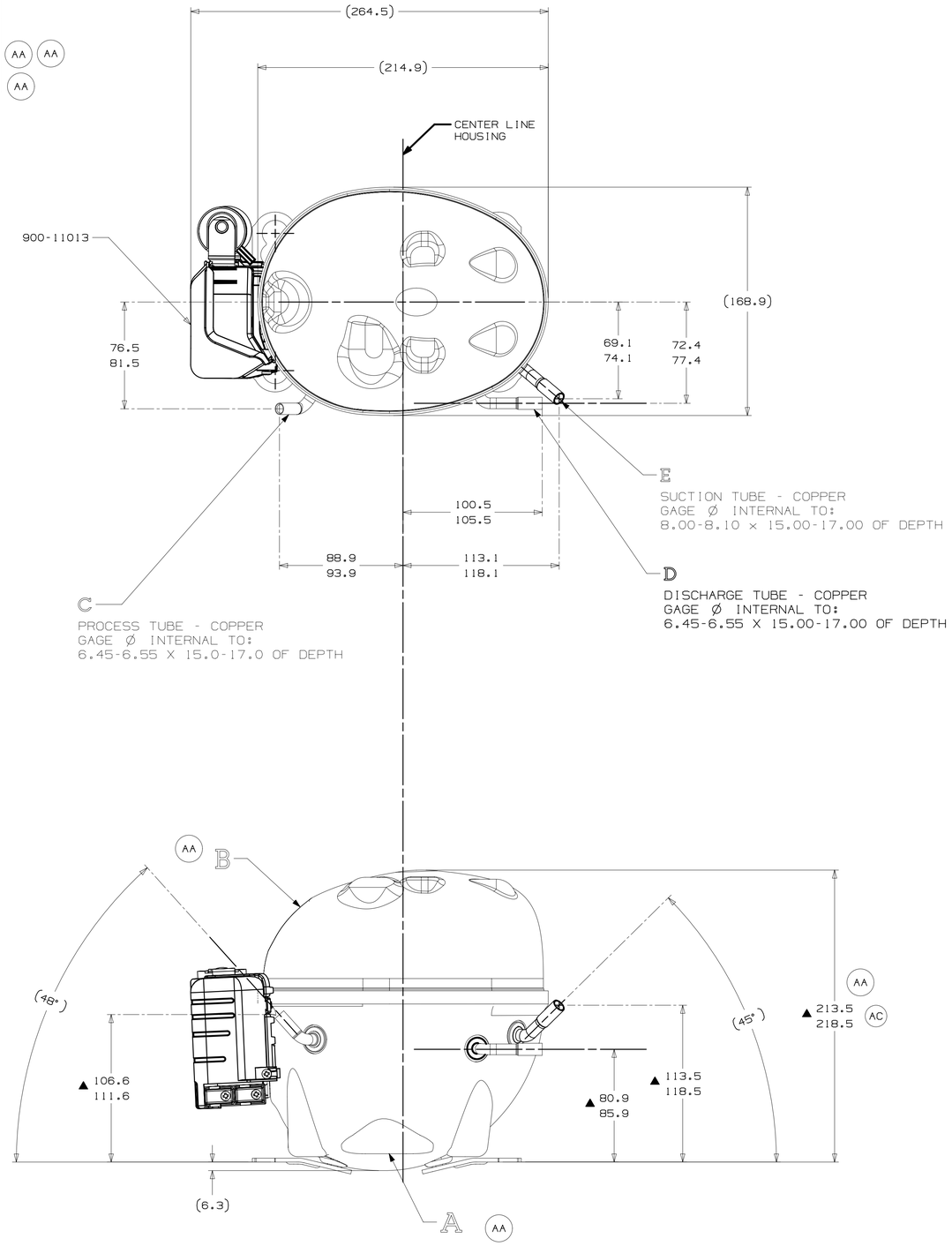

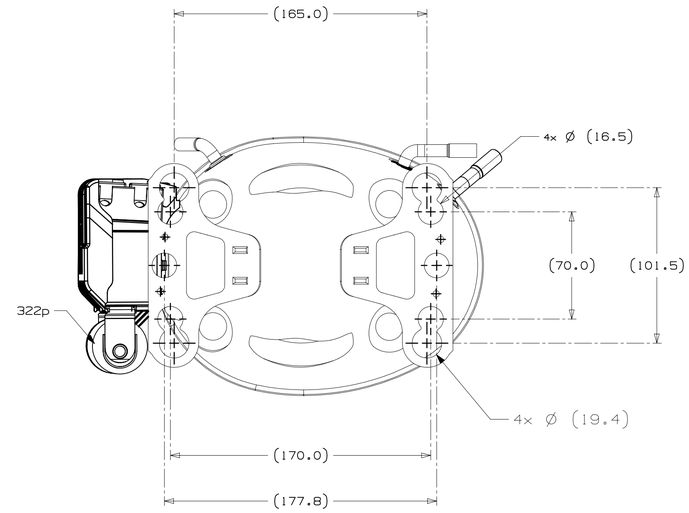

AUXILIARY VIEW
FIXING DIMENSIONS

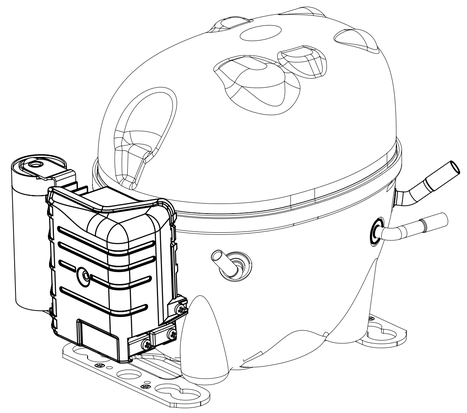

PERSPECTIVE VIEW
SCALE 1:2

NOTES:

1- IF SPECIFIED IN BM. ASSEMBLE PARTS AS SHOWN.
2- SEE SPEC. "A-B" & A-C FOR PROCESS.
3- THERE CAN BE NO CREASES IN THE TUBES (CREASES ARE SIGNS OR MARKS THAT ARE IN SOMETHING THAT BENDS).
4- AFTER THE FOLDS IN THE TUBES, CANNOT BE ACCELERATED TO AREA EXCEEDING 30%.
5- TUBES OF SUCTION, DISCHARGE AND PROCESS MUST BE FREE OF INK ON 15.8mm (5/8") FROM TOP OF THE TUBES AS SPEC. TECUMSEH A-84.
6- FOR SUPPLIER ENVIRONMENTAL REGULATORY REQUIREMENTS, SEE TECUMSEH GLOBAL SPEC-8.

LT	LC	CHANGE	DATE
AC	C6	ERA 213.9-218.9 CIAS. RG.	EC110253 15-JAN-25
AB	-	ERA 213.4-218.4 CIAS. HJ.	EC11416 22-MAI-24
AA	-	LIBERACAO	EC94857 18-01-21
	D10	ATUALIZADO DESENHO VER DESENHO DA TABELA E CARACA	
	B8	ALTERADO DIMENSAO ERA 211.9-216.9	
	C6	ALTER.TUBO DE DESCARGA ERA 580-10780 SOLIC. ENG. INDUSTRIAL PARA VOLTAR A CONDICAO INICIAL	
	G10	ALTER. TUBO DE DESCARGA ITEM "D" DA TABELA ERA 580-10244 SOLIC. ENG. INDUSTRIAL	
	G11	ALTER. TUBO DE SUCCAO ITEM "A" DA TABELA ERA 580-10019 SOLIC. AREA DE VENDAS	

THIS DRAWING OR PRINT (1) IS THE PROPERTY OF TECUMSEH PRODUCTS COMPANY, AND CONTAINS PROPRIETARY AND CONFIDENTIAL INFORMATION BELONGING TO TECUMSEH DO BRASIL. (11) IS LOANED AND SUBJECT TO THE RESTRICTION THAT IT IS EXPRESS AND SPECIFIC CONDITION THAT NEITHER IT OR THE INFORMATION CONTAINED THEREIN, IN WHOLE OR IN PART, SHALL BE COPIED TO OTHERS WITHOUT THE EXPRESS AND SPECIFIC WRITTEN CONSENT OF TECUMSEH PRODUCTS COMPANY AND THAT SUCH INFORMATION ONLY AS EXPRESSLY SPECIFIED MAY BE USED FOR ANY PURPOSE WHATSOEVER. (111) SHALL NOT BE COPIED OR TO ANY EXTENT WITHIN THE PERMITTED USE BE MADE AVAILABLE TO ANY PERSON OTHER THAN THE RECIPIENT EXCEPT AND (111) SHALL BE RETURNED BY THE RECIPIENT AT THE SUPPLIER'S REQUEST.

DO NOT SCALE THIS DRAWING. ALL TOPROD MATERIALS MUST NOT BE MAGNETIZED AS RECEIVED ON AT COMPRESSOR ASSEMBLY.

THIRD ANGLE PROJECTION

UNITS: mm

DRAWING SIZE: A1

D. A.SYMBOLS AS PROCEDURE 2.01.031 TECUMSEH OF BRAZIL

- CATEGORY I
- CATEGORY II
- CATEGORY III
- CATEGORY IV

Tecumseh

NAME	PART NO.
SALES COMPRESSOR	DCAL002
	SCALE 1:3 · PAGE 1/1
DATE 12-12-19 · REF.	FAMILY AL