DRAWING NO.
DCAV035

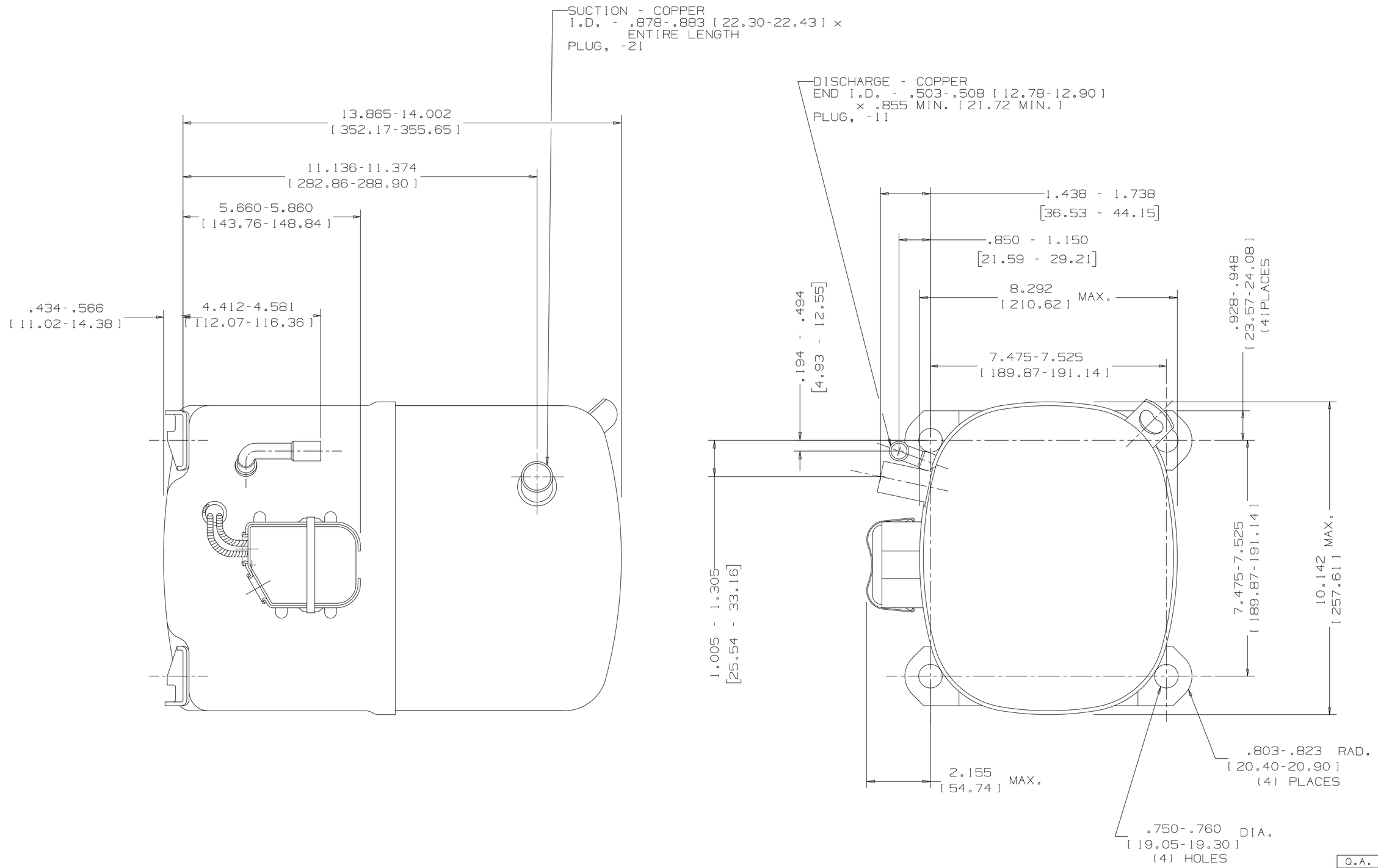

DIMENSIONS IN BRACKETS ARE MILLIMETERS

AV

Q.A. SYMBOLS

CK.	APR.	CHANGE	DATE
R	C.M.S. 23MAY00	#239337-000 EXTRANEOUS INFO REMOVED	
P	JJC 14NOV99	#238834-000 WAS 26223-1	
N	JJC 01MAR99	#235604-017 WAS HA677-7 REMOVED CHANGES	

LT LC

THIS DRAWING OR PRINT IS THE PROPERTY OF TECUMSEH PRODUCTS COMPANY (TECUMSEH) AND CONTAINS PROPRIETARY INFORMATION OF TECUMSEH. INFORMATION BELONGING TO THE RECIPIENT IS MADE AVAILABLE TO THE RECIPIENT ONLY FOR THE SPECIFIC CONDITION THAT NEITHER IT NOR THE INFORMATION WILL BE DISCLOSED THEREIN SHALL BE REPRODUCED OR OTHERWISE DISCLOSED TO OTHERS WITHOUT THE EXPRESS AND SPECIFIC WRITTEN CONSENT OF TECUMSEH. THE INFORMATION ONLY AS EXPRESSLY AND SPECIFICALLY AGREED TO IN WRITING BY TECUMSEH AND NOT OTHERWISE. (ii) SHALL NOT BE USED OR DUPLICATED IN ANY MANNER FOR ANY PURPOSE EXCEPT WITHOUT TECUMSEH'S PRIOR EXPRESS AND SPECIFIC WRITTEN CONSENT AND (iv) SHALL BE RETURNED BY THE RECIPIENT TECUMSEH PRODUCTS COMPANY UPON LATER'S REQUEST PROMPTLY AFTER SUCH REQUEST IS MADE.

DIS.CODE

DO NOT SCALE THIS DRAWING. ALL FERROUS MATERIALS MUST NOT BE MAGNETIZED AS RECEIVED FOR A COMPRESSOR ASSEMBLY.

NAME
SALES COMPRESSOR

DWN. BRODERICK 8-11-86
CK

THIS PRINT SUPERSEDES ALL PRINTS PRIOR TO

TECUMSEH PRODUCTS CO.
TECUMSEH, MICHIGAN

MATERIAL
NOTED

INTERNAL USE ONLY
q:\av\av-dcav035_r-c.prt

DRAWING NO.
DCAV035