DRAWING NO.
DEAV1

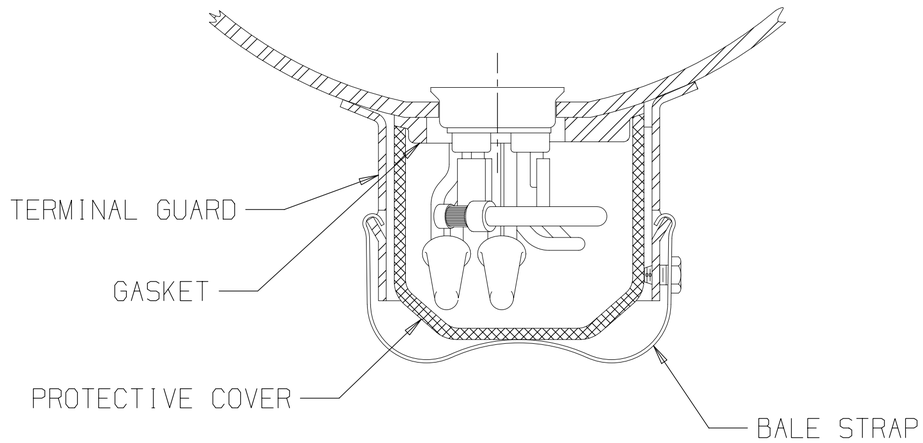

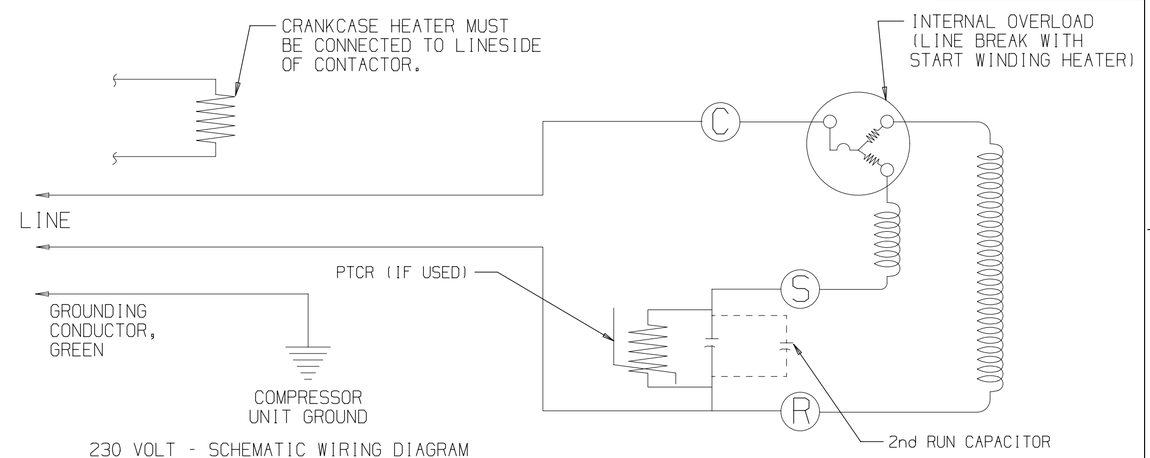

230 VOLT - SCHEMATIC WIRING DIAGRAM
PSC - INTERNAL OVERLOAD (LINE BREAK) - START WINDING HEATER - CRANKCASE HEATER
REF. DWG. MD472-40

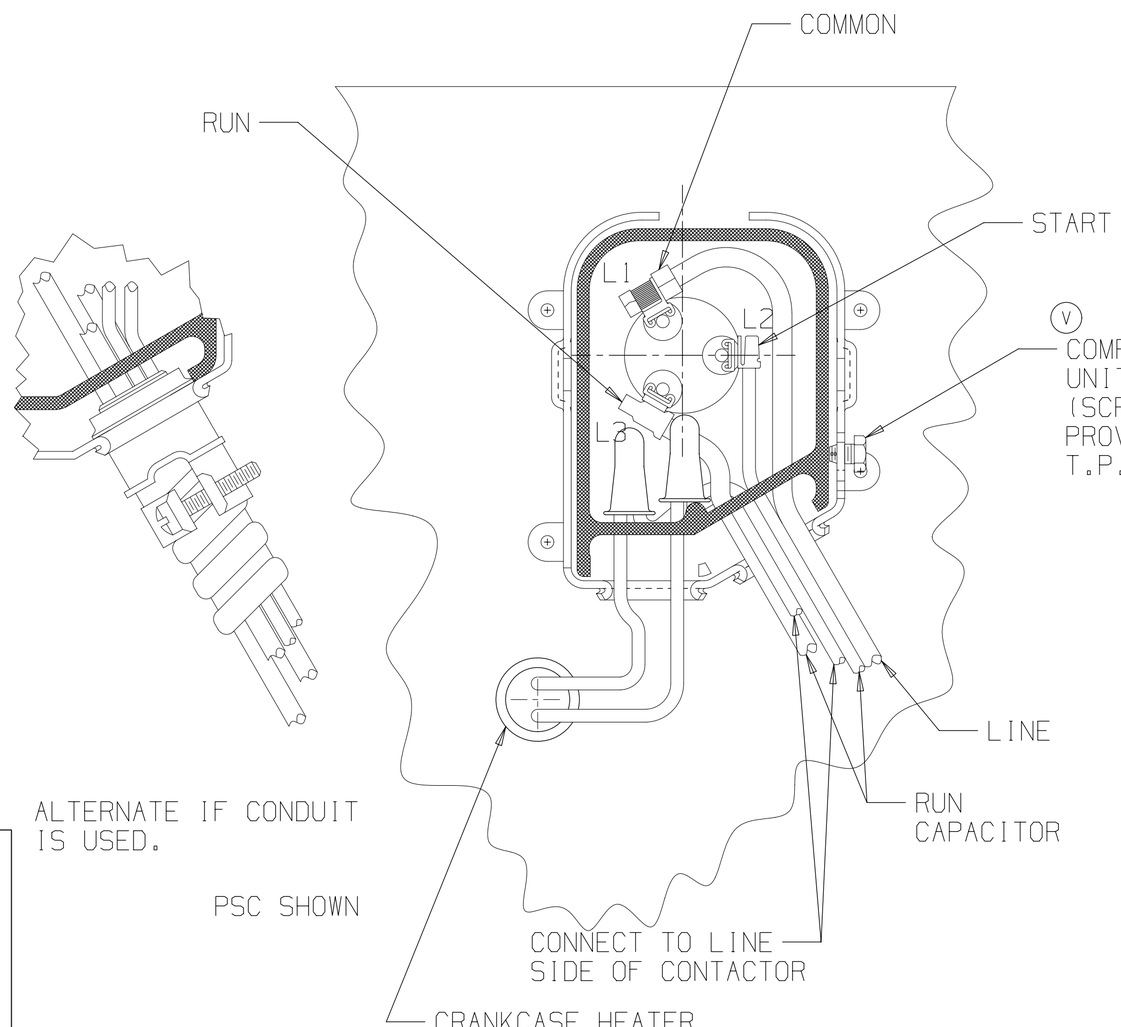

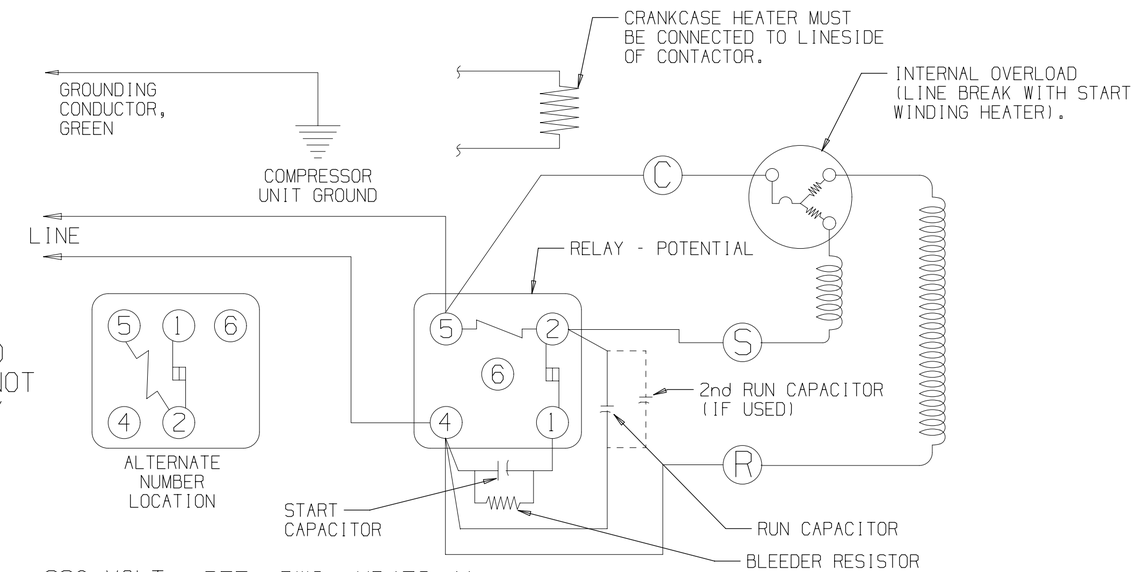

230 VOLT REF. DWG. MD472-41
SCHEMATIC WIRING DIAGRAM - CSR OR CSR START CAPACITOR ASSIST - INTERNAL OVERLOAD (LINE BREAK) - START WINDING HEATER - CRANKCASE HEATER.

AV-230 V. -PSC-INTERNAL OVERLOAD (LINE BREAK) - START WINDING HEATER - CRANKCASE HEATER.
AV-230 V. -CSR OR CSR START CAPACITOR ASSIST-INTERNAL OVERLOAD (LINE BREAK) - START WINDING HEATER - CRANKCASE HEATER.

NOTE:

1. ASSEMBLE PARTS AS SHOWN IF SPECIFIED ON B/M.
2. IF TWO RUN CAPACITORS ARE REQUIRED HOOK-UP AS SHOWN.

ENGLISH

Q.A. SYMBOLS
☆ = CATEGORY I
△ = CATEGORY II
□ = CATEGORY III
= CATEGORY IV

Ⓦ AIR CONDITIONING MODELS AV

LT	LC	CHANGE	DATE	DTD
W	3A	#242040-000 ADDED NOTE	03APR03	
V	5C	#235662 ADDED NOTE	5JS 4/10/97	
U	-	#231516 REVISE AND REDRAWN ON CAD	-	

THIS DRAWING OR PRINT (I) IS THE PROPERTY OF TECUMSEH PRODUCTS COMPANY (TECUMSEH) AND CONTAINS INFORMATION BELONGING TO TECUMSEH. IT IS LOANED AND MUST BE RETURNED TO RECIPIENT ON THE EXPRESS AND NOTE THE INFORMATION CONTAINED THEREIN SHALL BE DISCLOSED TO THE RECIPIENT OR OTHERS WITHOUT THE EXPRESS AND SPECIFIC WRITTEN CONSENT OF TECUMSEH AND THAT SUCH INFORMATION AND PROVIDED EXPRESSLY BY SPECIFICALLY AND NOT OTHERWISE (III) SHALL NOT BE USED IN ANY MANNER OR FOR ANY MANNER OR TO ANY EXTENT WITHOUT THE EXPRESS AND SPECIFIC WRITTEN CONSENT OF TECUMSEH AND (IV) SHALL BE RETURNED BY THE RECIPIENT LATTER'S REQUEST PROMPTLY AFTER THE RECEIPT OF THE SAME.

DIS.CODE

NAME: ELECTRICAL HOOK-UP

DWN. T.G. | CK. | APR. | SCALE 1" = 1"

THIS PRINT SUPERSEDES ALL PRINTS PRIOR TO

S CO.

MATERIAL

DRAWING NO. DEAV1

DO NOT SCALE THIS DRAWING ALL FERROUS MATERIALS MUST BE MAGNETIC AS RECEIVED OR AT COMPRESSOR ASSEMBLY.

DRAWING No. UGIIDISK5:I SHERMAN JAV-DEAV01_V-C.PRT | REVISION LEVEL: | REL

BANNER

User dwnrs Plot m-dwn01_w-c Date 12Aug-03 Time 11:05