DRAWING NO.
DCAV047

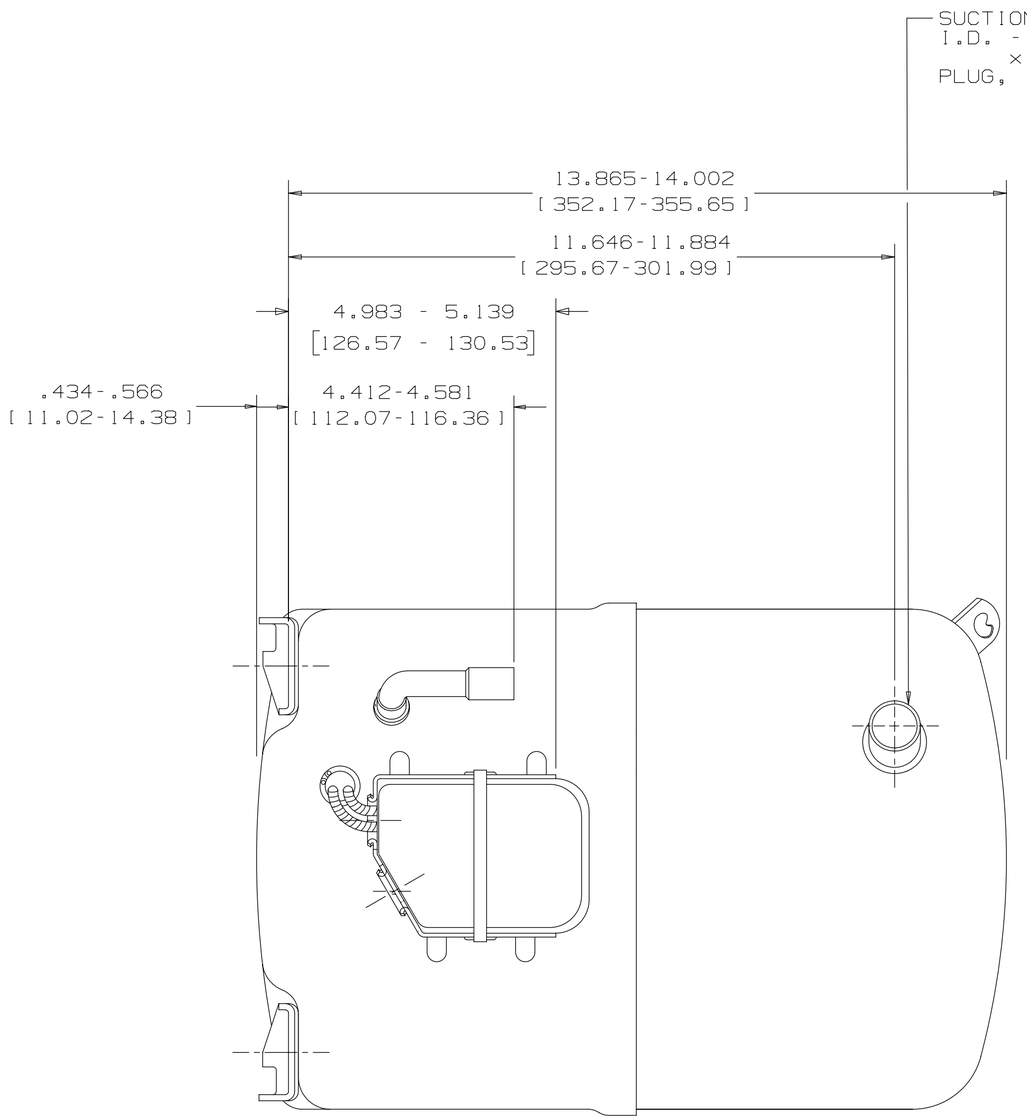

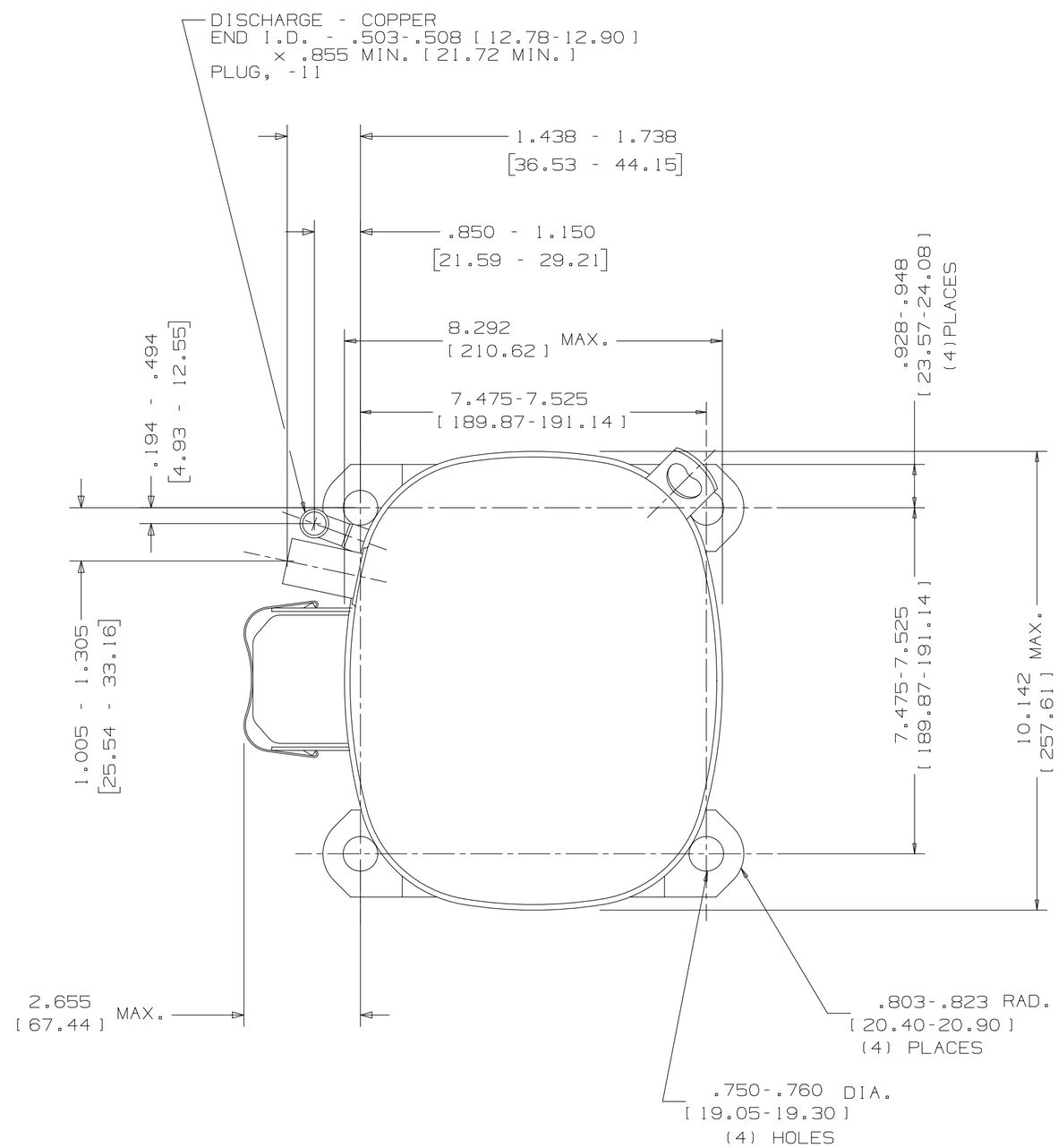

Q.A. SYMBOLS

DIMENSIONS IN BRACKETS ARE MILLIMETERS

AV

LT	LC	CHANGE	DATE	APR.	CK.
—	—	REMOVED CHANGES	02MAR99	JJC	J
J	5A	#235604-017 WAS#A677-5	02MAR99	JJC	J
K	6A	#238834-000 WAS 26233-1	14NOV99	JJC	K
L	—	#239337-000 EXTRANEOUS INFO REMOVED	24MAY00	C.M.S.	L

THIS DRAWING OR PRINT (I) IS THE PROPERTY OF TECUMSEH PRODUCTS COMPANY (TECUMSEH) AND CONTAINS INFORMATION PROPRIETARY TO TECUMSEH, INFORMATION BELONGING TO TECUMSEH, RECEIPT OR POSSESSION OF THIS SPECIFIC CONDITION THAT NEITHER IT NOR ITS CONTENTS WILL BE COPIED OR THEREON OR DISCLOSED THEREIN SHALL BE DISCLOSED TO THE RECIPIENT OR OTHERS WITHOUT THE EXPRESS AND SPECIFIC WRITTEN CONSENT OF TECUMSEH. THE INFORMATION ONLY AS EXPRESSLY AND SPECIFICALLY PROVIDED IN WRITING BY TECUMSEH AND NOT OTHERWISE. (II) SHALL NOT BE MADE OR USED EXCEPT WITH MANUFACTURE OR OPERATION WITHOUT TECUMSEH'S PRIOR EXPRESS AND SPECIFIC WRITTEN CONSENT. (IV) SHALL BE RETURNED BY THE RECIPIENT LATTER'S REQUEST PROMPTLY AFTER SUCH REQUEST IS MADE.

DIS.CODE

DO NOT SCALE THIS DRAWING. FERROUS MATERIALS MUST NOT BE MAGNETIZED AS REQUIRED BY THE COMPRESSOR ASSEMBLY.

NAME SALES COMPRESSOR

DWN. BRODERICK 5/16/91 | CK | D

THIS PRINT SUPERSEDES ALL PRINTS PRIOR TO

TECUMSEH PRODUCTS CO.
TECUMSEH, MICHIGAN

MATERIAL NOTED

INTERNAL USE ONLY
q:\av\av-dcav047_1-c.prt

DRAWING NO. DCAV047