DRAWING NO.
DCAW411

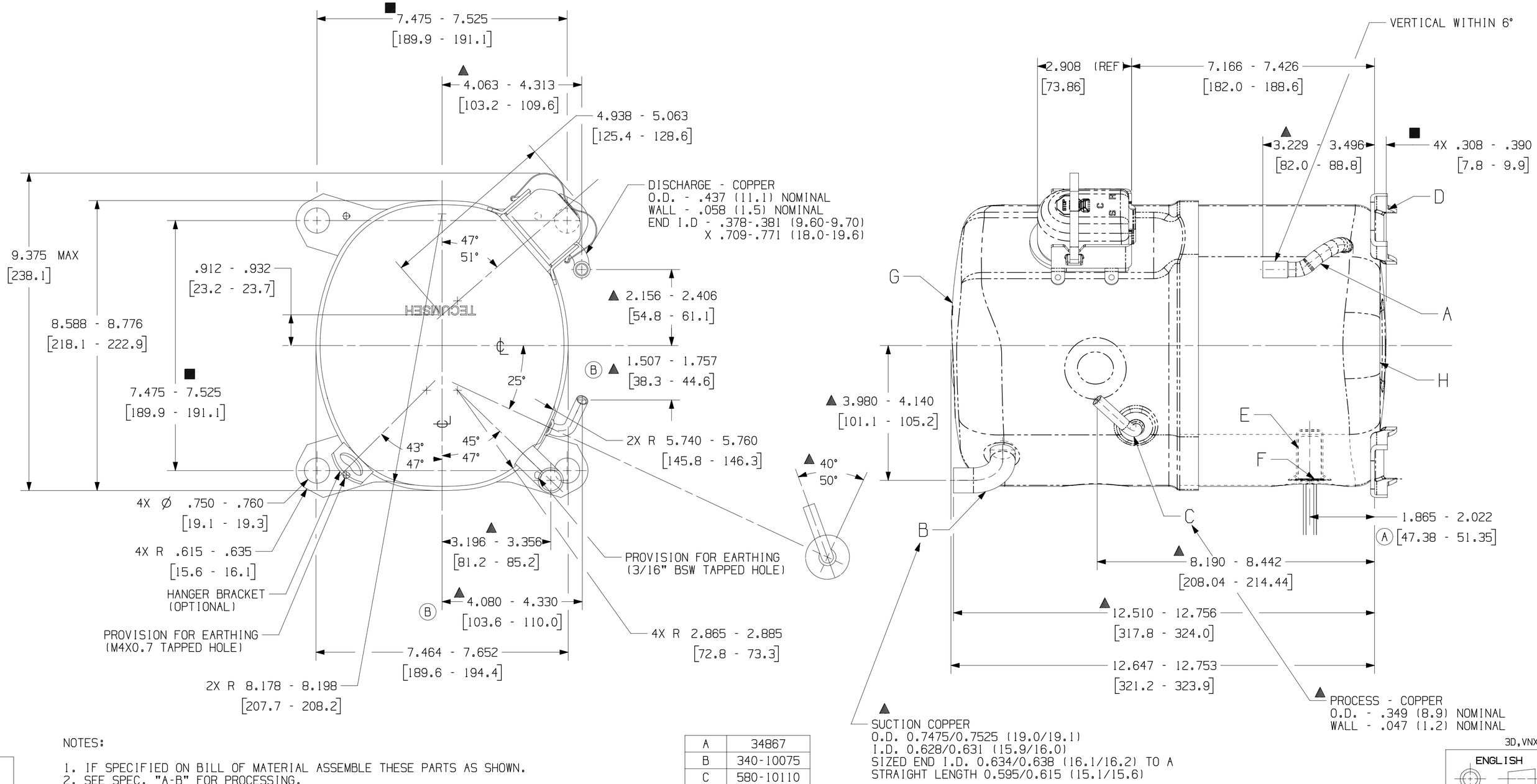

NOTES:

1. IF SPECIFIED ON BILL OF MATERIAL ASSEMBLE THESE PARTS AS SHOWN.
2. SEE SPEC. "A-B" FOR PROCESSING.
3. SEE DWG. #HA-10349 FOR ASSEMBLY OF DISCHARGE CONNECTOR AND SHOCKLOOP IN LOWER HOUSING.
4. PROTECTIVE PARTS ARE NOT SHOWN IN THE DRAWING, MENTIONED IN THE TABLE.
5. COMPRESSOR ACCESSORIES ARE NOT REPRESENTED IN THE DRAWING.
6. ▲ MUST COMPLY WITH T.P.Co. GLOBAL SPEC 08.

	A	34867
	B	340-10075
	C	580-10110
	D	AWX-2102-02
	E	90706
	F	28080-3
B	G	HA-10413
	H	HA-10349

NOTE:

DIMENSIONING = $\frac{\text{INCHES}}{\text{MILLIMETERS}}$ OR INCHES (MILLIMETERS)

3D,VNX10

ENGLISH

Q.A. SYMBOLS
★ = CATEGORY I
▲ = CATEGORY II
■ = CATEGORY III
= CATEGORY IV

AW

REL	LT	CHANGE	DATE
B	5A	EC103950 UPDATED UPPER HOUSING ASSEMBLY, DIMN 4.080-4.330 WAS 3.959-4.209 & DIMN 1.507-1.757 WAS 1.445-1.695	SIMRAN 22FEB22
A	3C	EC80244 DIMN 47.36-51.35 ADDED	20JAN18
		EC79086	15JUN17

THIS DRAWING OR PRINT (I) IS THE PROPERTY OF TECUMSEH PRODUCTS COMPANY (TECUMSEH) AND CONTAINS PROPRIETARY AND CONFIDENTIAL INFORMATION BELONGING TO TECUMSEH. (II) IS MADE AVAILABLE TO THE RECIPIENT ON THE EXPRESS AND SPECIFIC CONDITION THAT NEITHER IT NOR THE INFORMATION CONTAINED THEREON OR DISCLOSED THEREIN SHALL BE DISCLOSED OR MADE AVAILABLE TO OTHERS WITHOUT THE EXPRESS AND SPECIFIC WRITTEN CONSENT OF TECUMSEH AND THAT SUCH INFORMATION ONLY AS EXPRESSLY AND SPECIFICALLY APPROVED IN WRITING BY TECUMSEH AND NOT OTHERWISE. (III) SHALL NOT BE COPIED OR DUPLICATED IN ANY MANNER OR TO ANY EXTENT WITHOUT TECUMSEH'S PRIOR EXPRESS AND SPECIFIC WRITTEN CONSENT AND (IV) SHALL BE RETURNED BY THE RECIPIENT THEREOF TO TECUMSEH AT THE LATTER'S REQUEST PROMPTLY AFTER SUCH REQUEST IS MADE.

DO NOT SCALE THIS DRAWING ALL FERROUS MATERIALS MUST NOT BE MAGNETIZED AS RECEIVED OR AT COMPRESSOR ASSEMBLY.

DIS.CODE --

NAME: SALES COMPRESSOR

SCALE 1:2

THIS PRINT SUPERSEDES ALL PRINTS PRIOR TO

TECUMSEH PRODUCTS INDIA PVT. LTD.
BALLABGARH, INDIA

MATERIAL: NOTED

DRAWING NO. DCAW411

BANNER