A	HA642-26
B	HA674-03A
C	34711
D	34649
E	34467

DWG NO. DCAW099

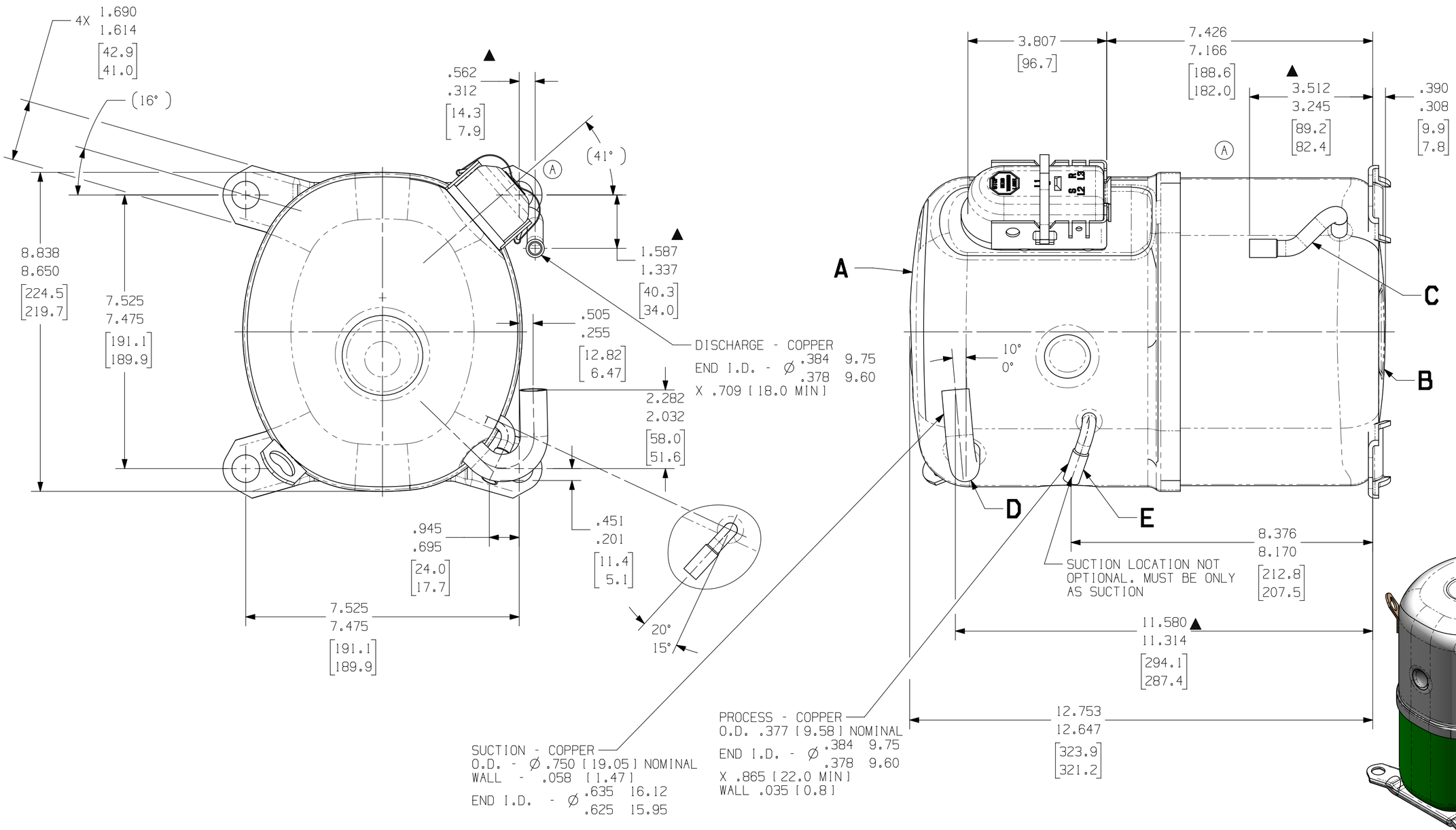

NOTES:

1. IF SPECIFIED ON BILL OF MATERIAL, ASSEMBLE THESE PARTS AS SHOWN.
2. SEE SPEC. "A-B" AND "A-C" FOR PROCESSING.
3. ▲ MUST COMPLY WITH T.P.CO. GLOBAL SPEC. 08.

DIMENSIONING = INCHES (MILLIMETERS)

SCALE 1:4

ENGLISH

Q.A. SYMBOLS
✱ = CATEGORY I
▲ = CATEGORY II
■ = CATEGORY III
= CATEGORY IV

AW

LT	LC	CHANGE	DATE
C	--	ECB9282 ATC REMODELED IN 3D TO MATCH DRAWING	BD 12MAR19
B	6C	#237791-000 WAS 3.826-4.076 54.8-61.1	T.M.G 13MAR99
A	5E	#236029-000 WAS 2.156-2.406 54.8-61.1	HINMAN 08/05/97
REL		#233955-151	----

THIS DRAWING OR PRINT IS THE PROPERTY OF TECUMSEH PRODUCTS COMPANY (TECUMSEH) AND CONTAINS INFORMATION BELONGING TO TECUMSEH. (i) IT MAY NOT BE DISCLOSED OR MADE AVAILABLE TO THIRD PARTIES WITHOUT TECUMSEH'S SPECIFIC CONDITION THAT NEITHER IT NOR THE INFORMATION CONTAINED THEREON OR INCLUDED IN ITS SCHEDULES SHALL BE DISCLOSED OR MADE AVAILABLE TO OTHERS WITHOUT TECUMSEH'S EXPRESS SPECIFIC WRITTEN CONSENT OF TECUMSEH. (ii) IT MAY NOT BE COPIED OR DUPLICATED IN ANY FORM OR MANNER WHATSOEVER WITHOUT APPROVED IN WRITING BY TECUMSEH. (iii) IT MAY NOT BE USED FOR ANY PURPOSE OTHER THAN THE PURPOSE FOR WHICH IT WAS SPECIFIC WRITTEN CONSENT AND (iv) ALL RIGHTS PATENT, COPYRIGHT, TRADE SECRET AND OTHER PROPRIETARY RIGHTS THEREOF TO TECUMSEH. AT THE LATTER'S REQUEST MAY BE EXPLICITLY AFFIRMED.

DIS.CODE	DESCRIPTION
	SALES COMPRESSOR

DO NOT SCALE THIS DRAWING. ALL FERROUS MATERIALS MUST NOT BE WAXED UNLESS AS RECEIVED OR AT COMPRESSOR ASSEMBLY.

SCALE 1:2 & NOTED

THIS PRINT SUPERSEDES ALL PRINTS PRIOR TO

TECUMSEH PRODUCTS CO.
ANN ARBOR, MICHIGAN

MATERIAL: NOTED

DWG NO. DCAW099