A	HA642-25
B	HA674-03
C	34711
D	40518-1

DWG NO. DCAW111

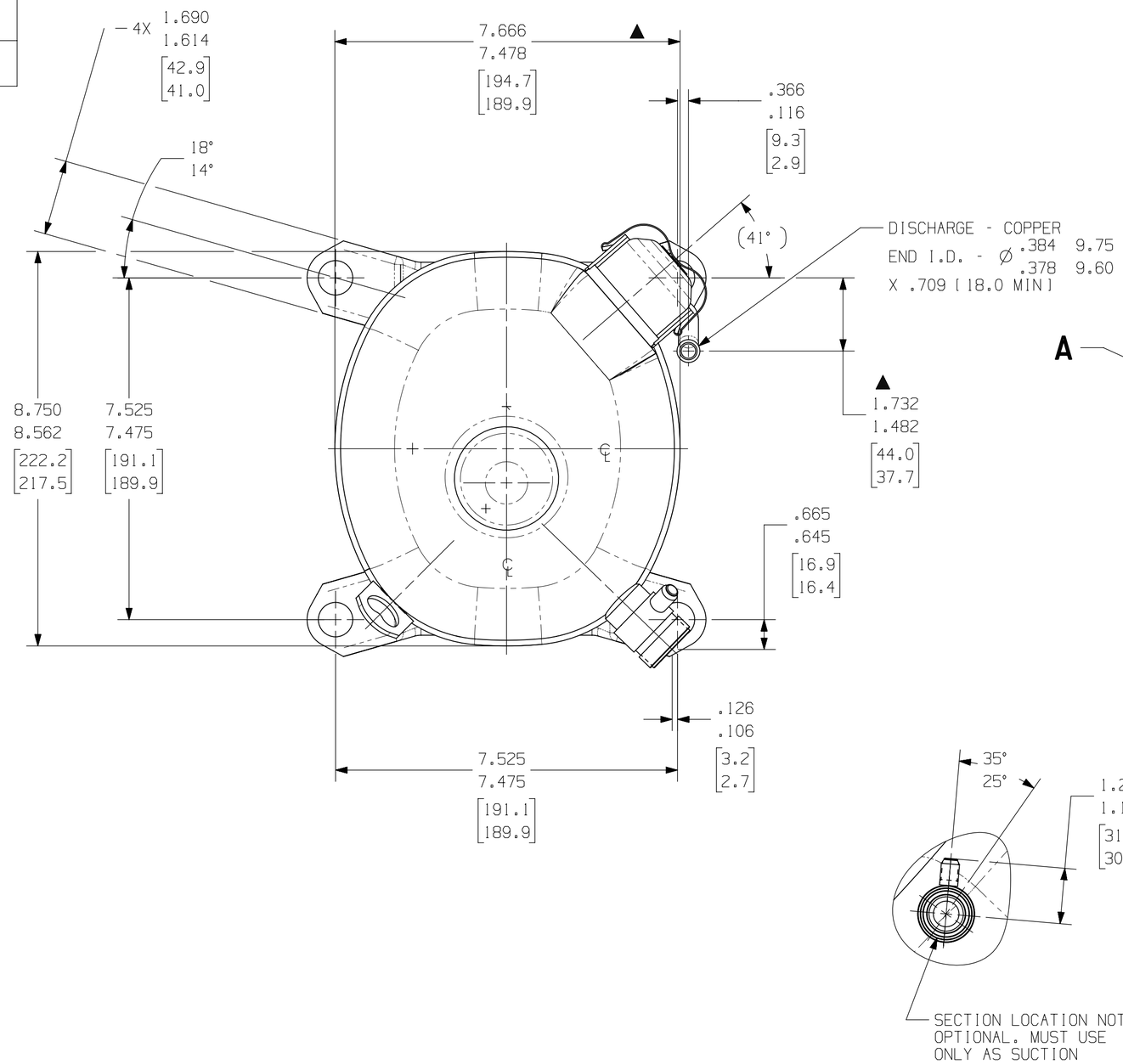

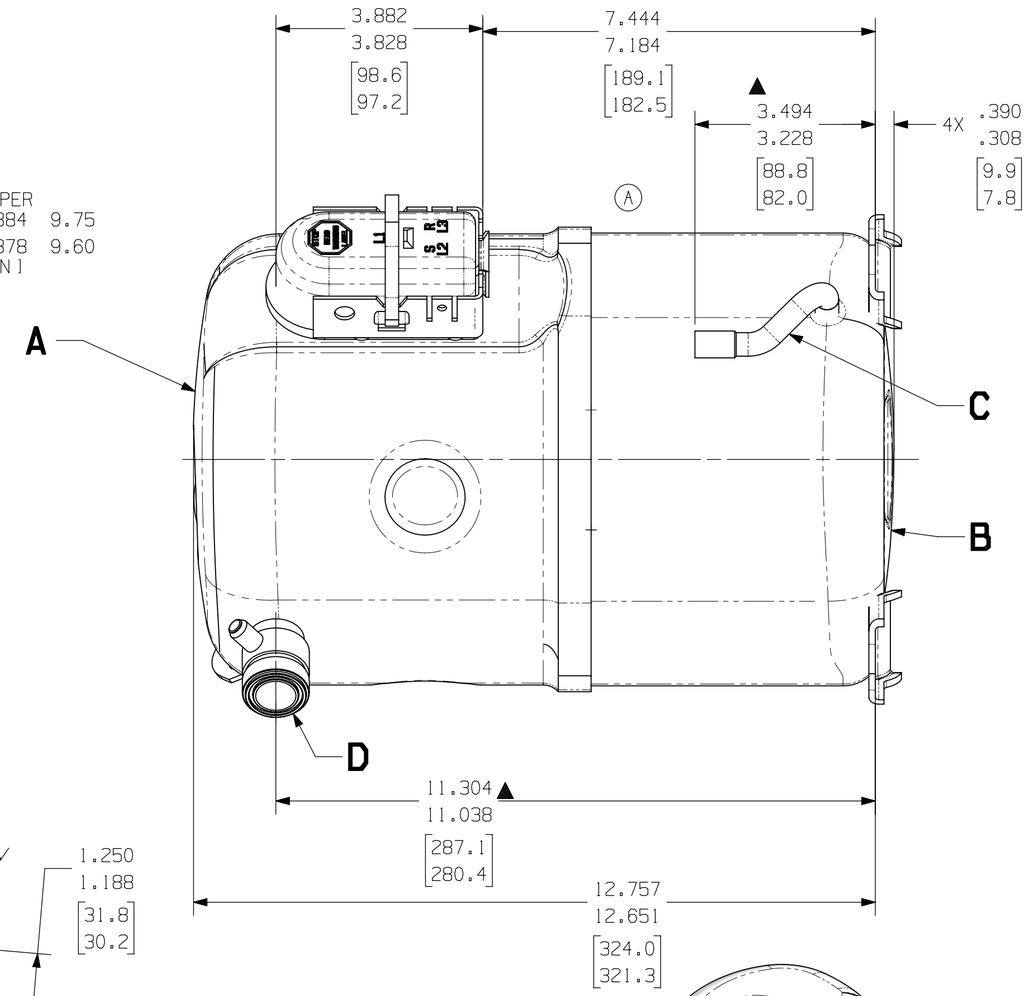

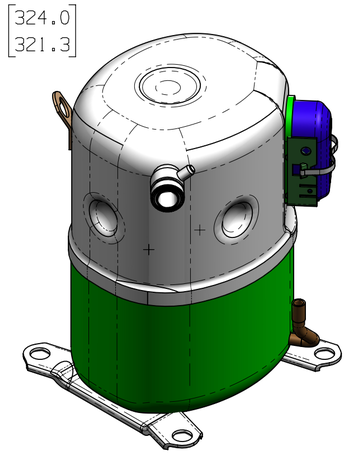

SCALE 1:4

AW

NOTES:

1. IF SPECIFIED ON BILL OF MATERIAL, ASSEMBLE THESE PARTS AS SHOWN.
2. SEE SPEC. "A-B" AND "A-C" FOR PROCESSING.
3. ▲ MUST COMPLY WITH T.P.CO. GLOBAL SPEC. 08.

DIMENSIONING = INCHES (MILLIMETERS)

ENGLISH

Q.A. SYMBOLS
✱ = CATEGORY I
▲ = CATEGORY II
■ = CATEGORY III
= CATEGORY IV

LT	LC	CHANGE	DATE	
				BD 12MAR19
D	--	EC89282 ATC REMODELED IN 3D TO MATCH DRAWING	----	
C	2B	#240848-000 WAS -32	06JUL01	T.M.G
B	2B	#232836-002 WAS PLUG -9	2/10/98	T.M.G
A	5E	#236029-000 WAS 2.156-2.406 54.8-61.1	08/05/97	HINMAN
REL		#233955-151		

THIS DRAWING OR PRINT FILL IS THE PROPERTY OF TECUMSEH PRODUCTS COMPANY (TECUMSEH) AND CONTAINS INFORMATION RELATING TO TECUMSEH, IT IS MADE AVAILABLE TO THE RECIPIENT ONLY FOR THE BENEFIT OF TECUMSEH. SPECIFIC CONDITION THAT NEITHER IT NOR THE INFORMATION CONTAINED THEREIN OR DRAWN FROM THEREIN SHALL BE DISCLOSED OR MADE AVAILABLE TO ANY THIRD PARTY WITHOUT THE PRIOR SPECIFIC WRITTEN CONSENT OF TECUMSEH. DISCLOSURE OR DISTRIBUTION OF THIS DRAWING AND SPECIFICATION APPROVED IN WRITING BY TECUMSEH MAY NOT BE COPIED OR DUPLICATED IN ANY MANNER, IN WHOLE OR IN PART, WITHOUT SPECIFIC WRITTEN CONSENT AND (IV) SHALL BE RETURNED TO TECUMSEH UPON REQUEST THEREOF TO TECUMSEH AT THE LATTER'S REQUEST PROMPTLY AFTER SAMPLES HAVE BEEN MADE.

DO NOT SCALE THIS DRAWING. ALL FERROUS MATERIALS MUST NOT WHISTLE WHEN AS RECEIVED OR AT COMPRESSOR ASSEMBLY.

DIS.CODE

DESCRIPTION: SALES COMPRESSOR

SCALE 1:2 & NOTED

THIS PRINT SUPERSEDES ALL PRINTS PRIOR TO

TECUMSEH PRODUCTS CO.
ANN ARBOR, MICHIGAN

MATERIAL: NOTED

DWG NO. DCAW111