DRAWING NO.
DCAW147

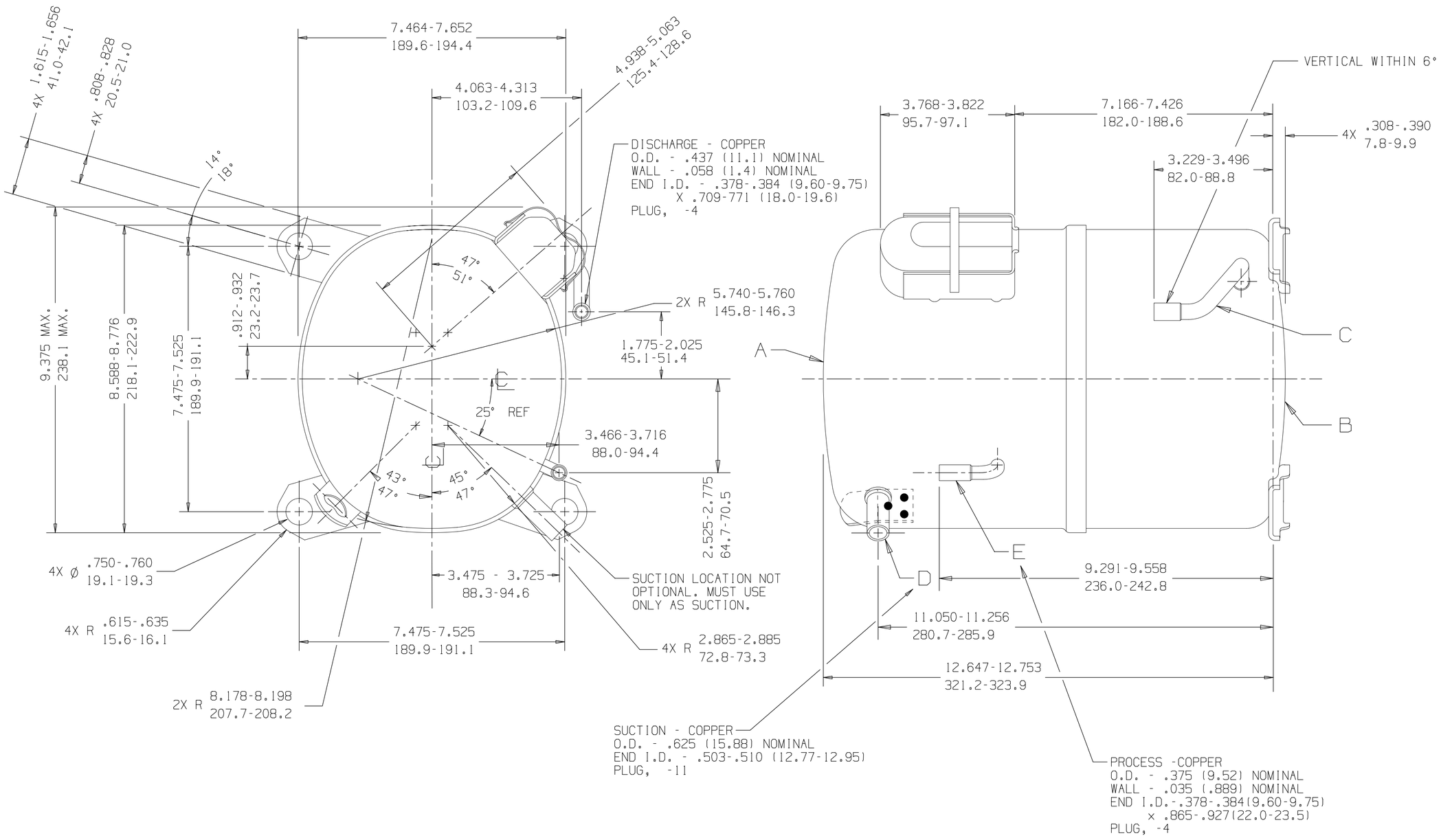

NOTE

1. IF SPECIFIED ON BILL OF MATERIAL ASSEMBLE THESE PARTS AS SHOWN.

DIMENSIONING = INCHES / MILLIMETERS OR INCHES (MILLIMETERS)

AWG

Q.A. SYMBOLS
- ✡ = CATEGORY I
- ▲ = CATEGORY II
- ▨ = CATEGORY III
- = CATEGORY IV

MANUFACTURING NOTES

1. SEE DWG. #AHT38 FOR ASSY. OF DISCHARGE CONNECTOR & LOWER SHOCK LOOP IN LOWER HOUSING.
2. SEE SPEC. "A-B" & "A-C" FOR PROCESSING.

A	HA642-13			
B	HA674-3			
C	34711			
D	34769			
E	34467			

REL	LT	LC	CHANGE	DATE
			#238730-001	

THIS DRAWING OR PRINT IS THE PROPERTY OF TECUMSEH PRODUCTS COMPANY (TECUMSEH) AND CONTAINS INFORMATION BELONGING TO TECUMSEH. RECIPIENT AGREES TO USE THE SPECIFIC CONDITION THAT NEITHER IT NOR ANYONE ACTING ON ITS BEHALF WILL REPRODUCE OR DISCLOSE THERE IN SMALL OR LARGE PART THE INFORMATION OR OTHERS WITHOUT THE EXPRESS AND SPECIFIC WRITTEN CONSENT OF TECUMSEH. THIS DRAWING INFORMATION ONLY AS EXPRESSLY AND SPECIFICALLY AGREED TO IN WRITING BY TECUMSEH AND NOT OTHERWISE. (III) SHALL NOT GIVE, SELL, DISTRIBUTE, OR OTHERWISE MAKE AVAILABLE IN ANY MANNER OR TO ANY EXTENT WITHOUT TECUMSEH'S PRIOR EXPRESS AND (IV) SHALL BE RETURNED BY THE RECIPIENT TECUMSEH UPON ITS REQUEST OR THE LATTER'S REQUEST PROMPTLY AFTER SUCH REQUEST IS MADE.

DIS.CODE

DRAWING SCALE FOR THIS DRAWING AS PLOTTED. MATERIALS MUST NOT BE LARGER THAN AS PLOTTED AS RELATED TO AWG COMPRESSOR ASSEMBLY.

NAME: SALES COMPRESSOR

DWN. HOWELL 23SEP99 | CK | APP | SCALE

TECUMSEH PRODUCTS CO.
TECUMSEH, MICHIGAN

MATERIAL: NOTED

INTERNAL USE ONLY
p:\howell\aw-dcaw147_rel-C.PRT

THIS PRINT SUPERSEDES ALL PRINTS PRIOR TO

DRAWING NO. DCAW147