PART NO.
DEAW-2

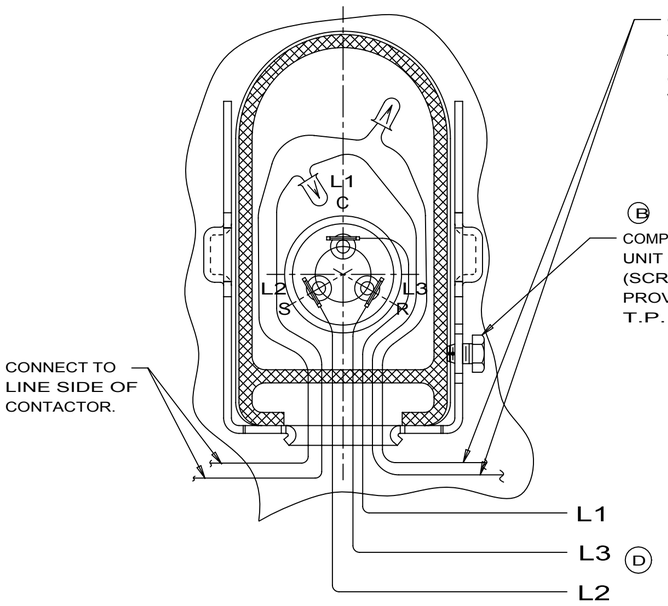


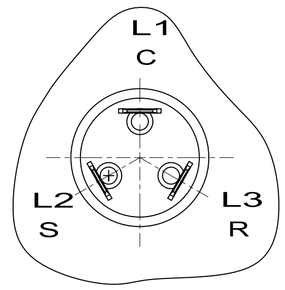


TERMINAL MAY BE THIS SIZE

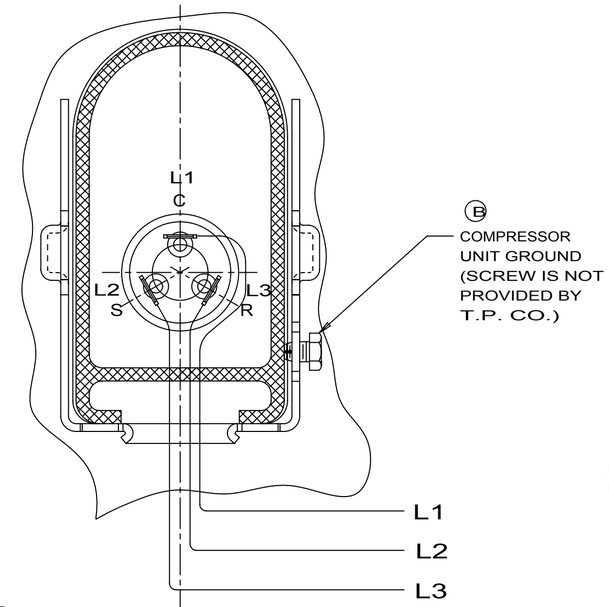


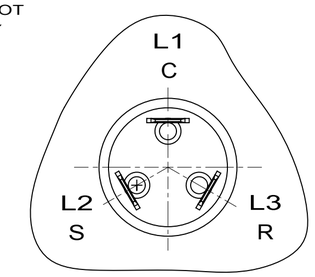


TERMINAL MAY BE THIS SIZE

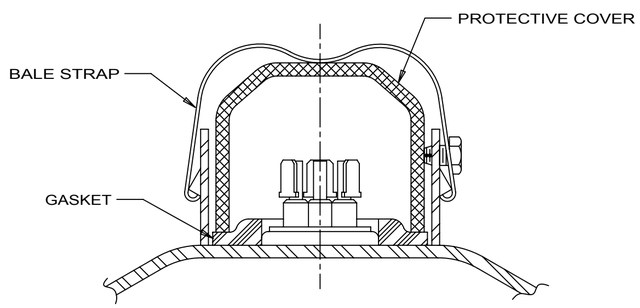


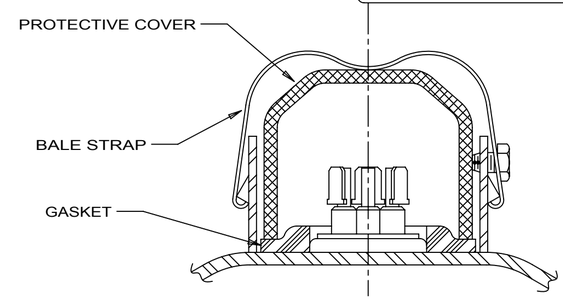


WARNING - WIRING DIAGRAM MUST BE FOLLOWED AS SHOWN. ANY MISWIRING CAN CAUSE SERIOUS ELECTRICAL HAZARD AND POTENTIAL DAMAGE OR RUPTURE OF COMPONENT ELECTRICAL PARTS.

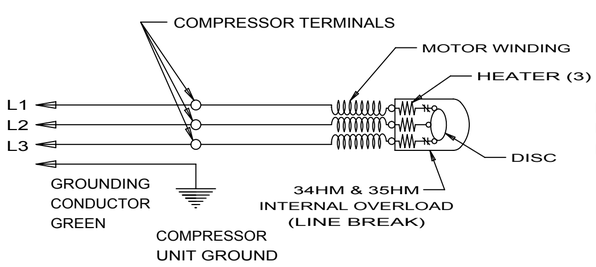


SCHEMATIC WIRING DIAGRAM - 3 PHASE
INTERNAL OVERLOAD (LINE BREAK)
REF DWG MD472-24

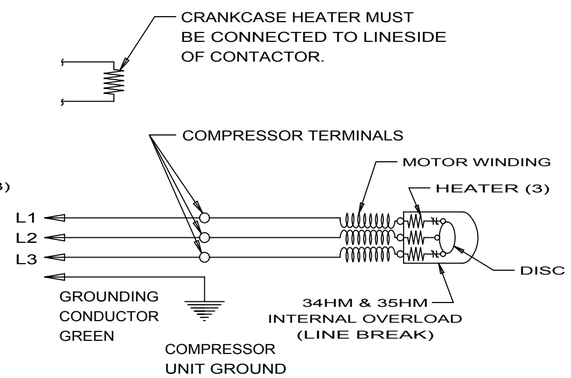


SCHEMATIC WIRING DIAGRAM - 3 PHASE
INTERNAL OVERLOAD AND (LINE BREAK)
REF DWG MD472-43

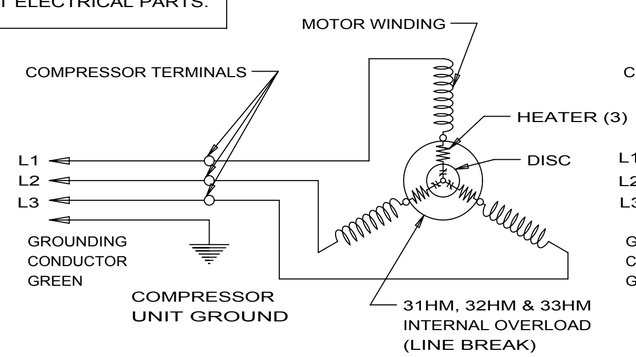


SCHEMATIC WIRING DIAGRAM - 3 PHASE
INTERNAL OVERLOAD (LINE BREAK)
REF DWG MD472-24

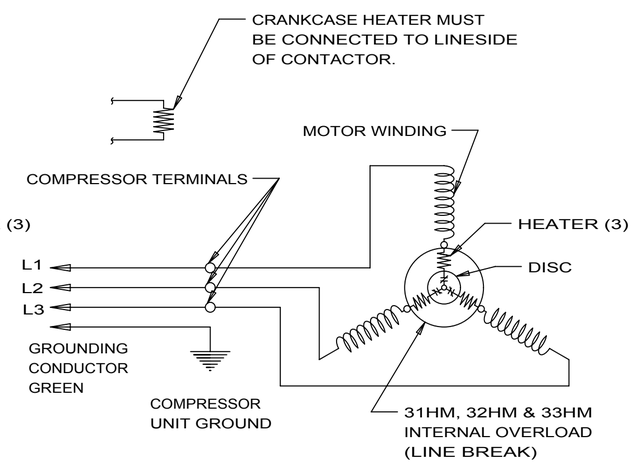


SCHEMATIC WIRING DIAGRAM - 3 PHASE
INTERNAL OVERLOAD (LINE BREAK) AND
CRANKCASE HEATER. REF DWG MD472-43

Q.A. SYMBOLS

AW - 3 PHASE - INTERNAL OVERLOAD (LINE BREAK) - CRANKCASE HATER.
AW - 3 PHASE - INTERNAL OVERLOAD (LINE BREAK).

AW

| | | | | | | | |
|---|---|---|---|---|---|---|---|
| | | RDS 17JUL09 | T.M.G 5DEC03 | | SJS 4/16/97 | — | DATE |
| | | EC26258 CHANGED L2 & L3 | #242685-000 REVISED WIRING DIAGRAM | UPDATED TO NX | #235647 ADDED NOTE | #227799 REDRAWN NO CHANGE | CHANGE |
| | | D 6D | C 8B | — — | B 2F 5F | A — | LT LC |

THIS DRAWING OR PRINT (1) IS THE PROPERTY OF TECUMSEH PRODUCTS COMPANY, (2) CONTAINS PROPRIETARY AND CONFIDENTIAL INFORMATION OF TECUMSEH, (3) IS MADE AVAILABLE TO THE RECIPIENT ON THE EXPRESS AND REPRESENTATION THAT IT WILL NOT THE INFORMATION CONTAINED THEREIN OR THE PRODUCT THEREOF BE DISCLOSED OR MADE AVAILABLE TO OTHERS WITHOUT THE EXPRESS AND WRITTEN CONSENT OF TECUMSEH AND THAT SUCH INFORMATION WILL BE USED ONLY FOR PURPOSES APPROVED IN WRITING BY TECUMSEH. (4) THIS DRAWING IS VERBALLY AND OTHERWISE LIMITED, (5) SHALL NOT BE REPRODUCED IN WHOLE OR IN PART IN ANY MANNER OR TO ANY EXTENT WITHOUT SPECIFIC WRITTEN CONSENT AND (IV) SHALL BE RETURNED BY THE RECIPIENT THEREOF TO TECUMSEH AT THE LATTER'S REQUEST PROMPTLY AFTER USE HAS CEASED.

DIS.CODE

DO NOT SCALE THIS DRAWING ALL FERROUS MATERIALS MUST NOT BE EXPOSED TO RUST RECEIVED OR AT COMPRESSOR ASSEMBLY.

NAME: ELECTRICAL HOOK-UP

DWN. R.M.D. | CK. | APR. | SCALE 1"=1" | THIS PRINT SUPERSEDES ALL PRINTS PRIOR TO

MATERIAL

S CO.

PART NO. DEAW-2