DRAWING NO. DCAW172

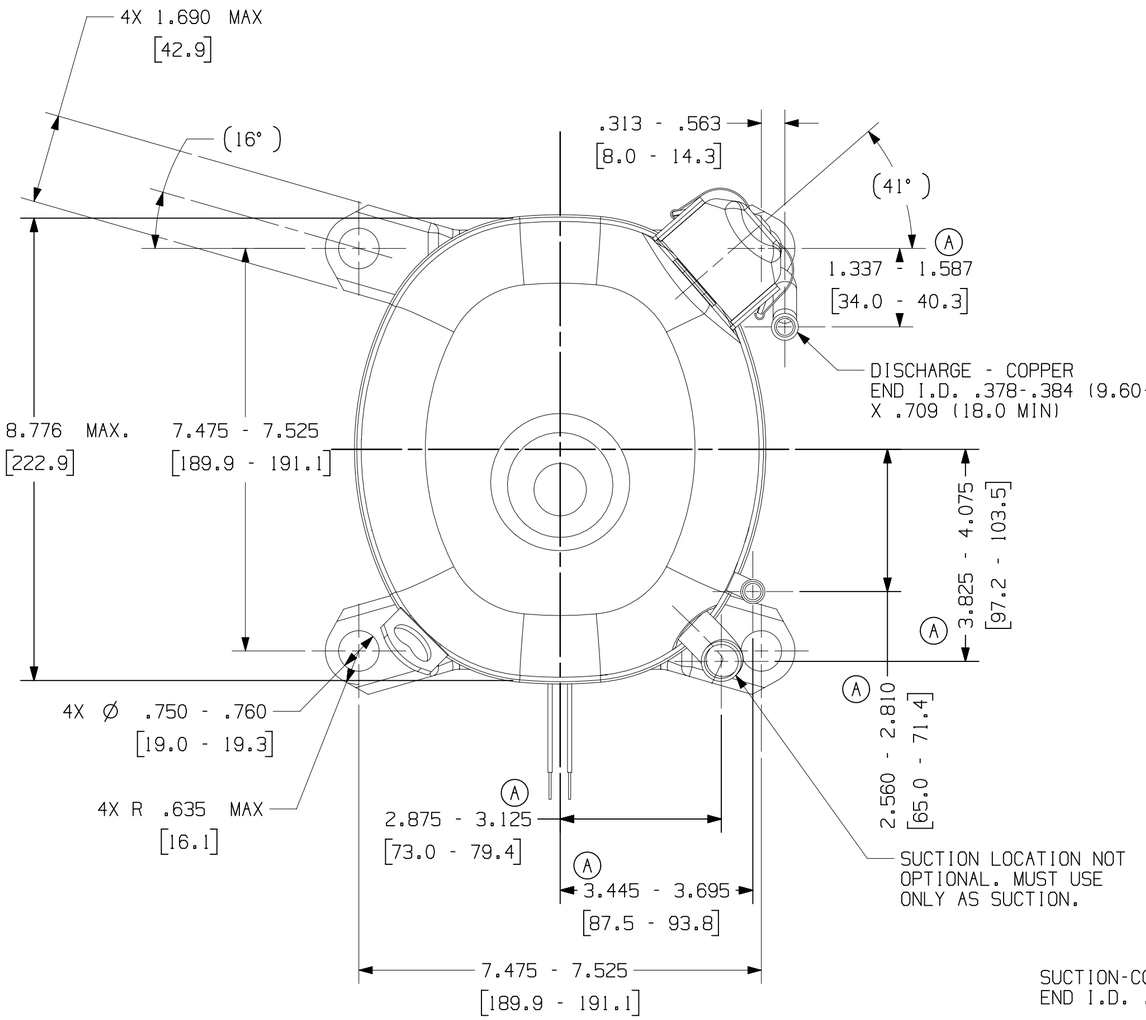

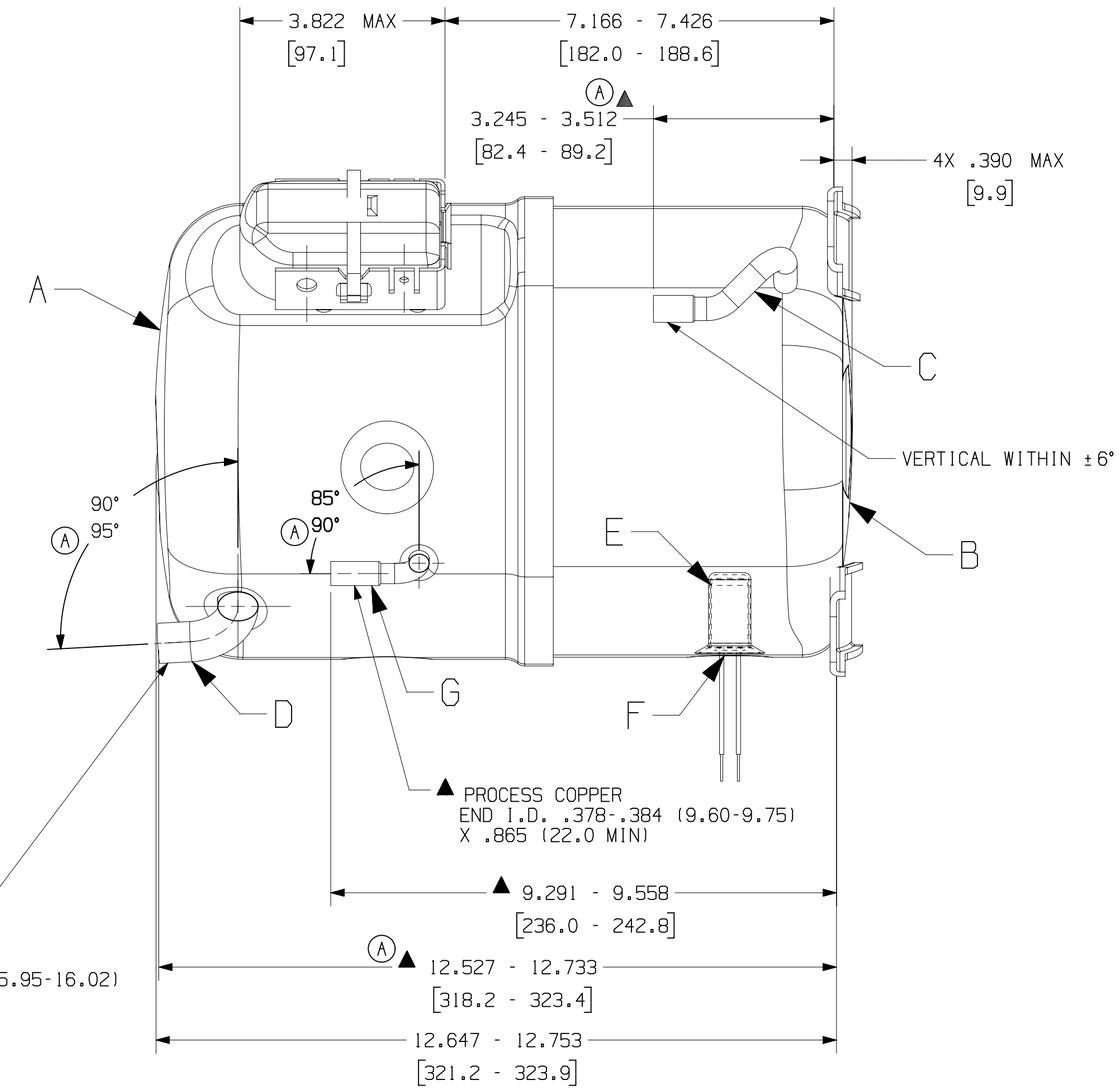

A	HA642-26/ HA-10504
B	HA674-04/ HA-10545
C	34711
D	34854
E	90706
F	28080-3
G	34467

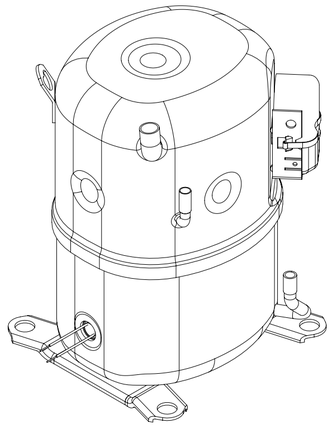

SCALE 1:4

NOTE:

1. IF SPECIFIED ON BILL OF MATERIAL ASSEMBLE THESE PARTS AS SHOWN.
2. SEE SPEC. "A-B" FOR PROCESSING.
3. ▲ MUST COMPLY WITH T.P.Co. GLOBAL SPEC 08.
4. SEE DWG. #AHT3 FOR ASSEMBLY OF DISCHARGE CONNECTOR AND SHOCK LOOP IN LOWER HOUSING

DIMENSIONING = INCHES / MILLIMETERS OR INCHES (MILLIMETERS)

3D,VNX10

ENGLISH

Q.A. SYMBOLS
✱ = CATEGORY I
▲ = CATEGORY II
■ = CATEGORY III
= CATEGORY IV

AW

REL	LT	LC	CHANGE	DATE
A	—	—	EC100080 SUCTION & PROCESS TUBE DIM. REF. CHANGED, TABLE UPDATED	RP 05MAR21
			EC86792	—

THIS DRAWING OR PRINT IS THE PROPERTY OF TECUMSEH PRODUCTS COMPANY (TECUMSEH) AND CONTAINS INFORMATION BELONGING TO TECUMSEH. IT IS MADE AVAILABLE TO THE RECIPIENT ONLY FOR REFERENCE IN SPECIFIC CONDITION THAT NEITHER IT NOR ANY INFORMATION CONTAINED THEREIN OR DISCLOSED THEREIN SHALL BE DISCLOSED OR MADE AVAILABLE TO THIRD PARTIES WITHOUT THE SPECIFIC WRITTEN CONSENT OF TECUMSEH, EXPRESSLY AND SPECIFICALLY APPROVED IN WRITING BY TECUMSEH. NOR SHALL IT BE USED FOR ANY PURPOSE NOT SPECIFIC WRITTEN CONSENT AND PRIOR EXPRESS WRITTEN CONSENT OF TECUMSEH. NOR SHALL IT BE COPIED OR DUPLICATED IN ANY FORM OR MANNER WHATSOEVER, NOR PARTS THEREOF, TO TECUMSEH AT THE ADDRESS SHOWN BELOW, IMMEDIATELY AFTER SUCH REQUEST IS MADE.

DIS.CODE --

DO NOT SCALE THIS DRAWING ALL FERROUS MATERIALS MUST NOT BE WELDED UNTIL AS RECEIVED OR AT COMPRESSOR ASSEMBLY.

NAME SALES COMPRESSOR

SCALE 1:2 & NOTED

TECUMSEH PRODUCTS CO.
ANN ARBOR, MICHIGAN

MATERIAL NOTED

THIS PRINT SUPERSEDES ALL PRINTS PRIOR TO

DRAWING NO. DCAW172

BANNER