A	HA642-13
B	HA674-03A
C	34711
D	34649
E	34467

DWG NO.
DCAW120

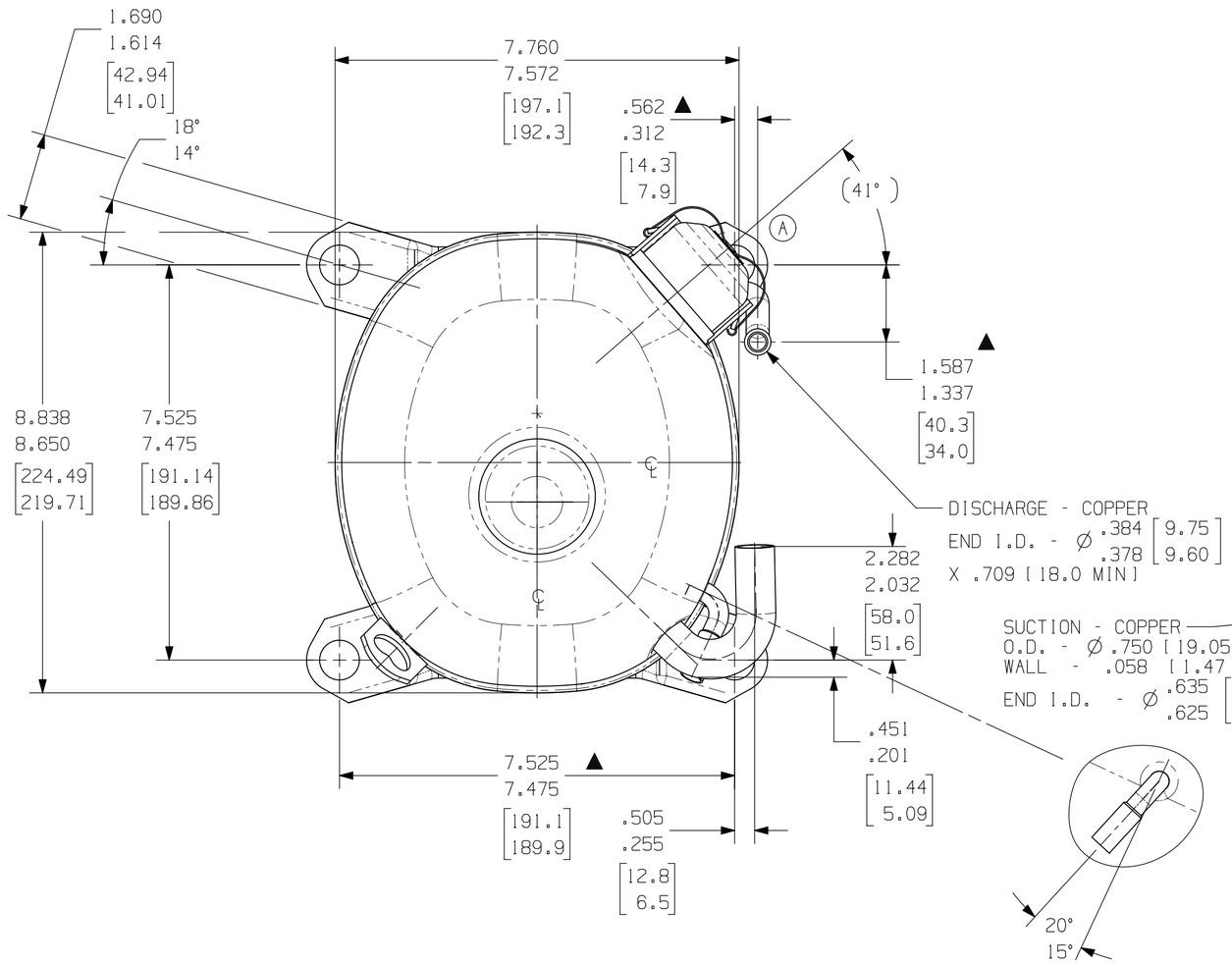

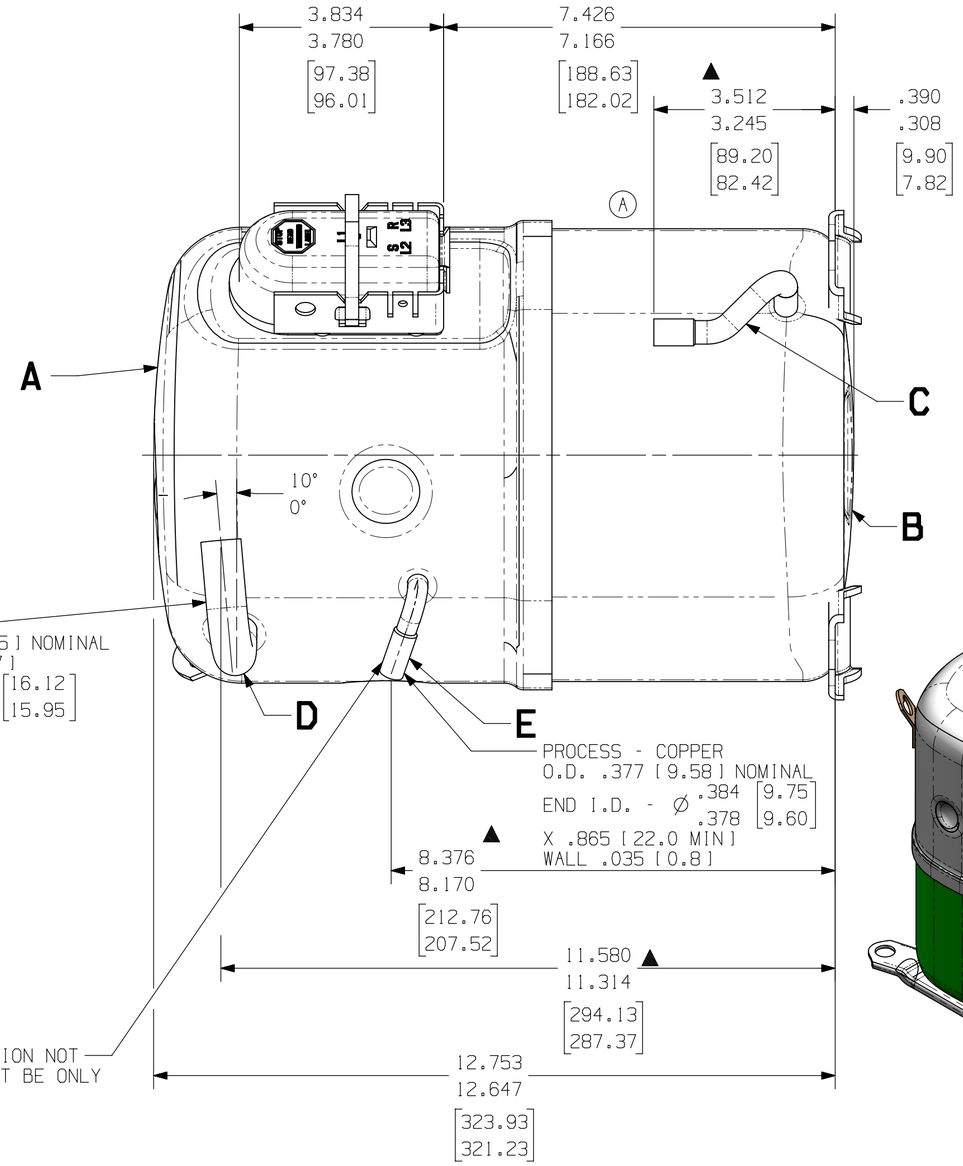

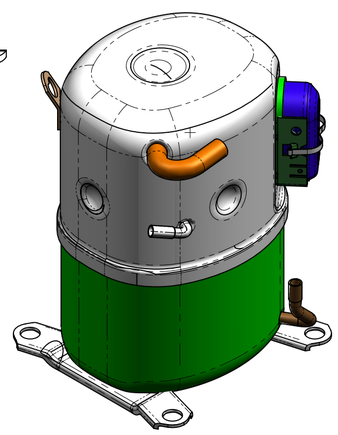

SCALE 1:4

NOTES:

1. IF SPECIFIED ON BILL OF MATERIAL, ASSEMBLE THESE PARTS AS SHOWN.
2. SEE SPEC. "A-B" AND "A-C" FOR PROCESSING.
▲ 3. MUST COMPLY WITH T.P.CO. GLOBAL SPEC. 08.

DIMENSIONING = INCHES (MILLIMETERS)

ENGLISH

Q.A. SYMBOLS
★ = CATEGORY I
▲ = CATEGORY II
■ = CATEGORY III
= CATEGORY IV

AW

LT	LC	CHANGE	DATE
C	--	EC89282 ATC REMODELED IN 3D TO MATCH DRAWING	BD 13MAR19
B	6C	#237791-000 WAS 3.826-4.076 54.8-61.1	T.M.G 13MAR99
A	5E	#236029-000 WAS 2.156-2.406 54.8-61.1	HINMAN 08/05/97
REL		#233955-151	----

THIS DRAWING OR PRINT (IF ANY) IS THE PROPERTY OF TECUMSEH PRODUCTS COMPANY (TECUMSEH) AND CONTAINS INFORMATION PROPRIETARY TO TECUMSEH, (I) IS MADE AVAILABLE TO THE RECIPIENT ONLY FOR USE WITH THE SPECIFIC CONDITION THAT NEITHER IT NOR THE INFORMATION CONTAINED THEREON OR DERIVED THEREFROM SHALL BE DISCLOSED OR MADE AVAILABLE TO THIRD PARTIES WITHOUT THE PRIOR SPECIFIC WRITTEN CONSENT OF TECUMSEH, EXPRESSLY AND SPECIFICALLY APPROVED IN WRITING BY TECUMSEH (II) SHALL NOT BE COPIED OR REPRODUCED IN ANY MANNER OR FORM EXCEPT WITH THE SPECIFIC WRITTEN CONSENT AND (III) UPON REQUEST TO TECUMSEH, AT THE LATTER'S REQUEST MUST FORTHWITH THEREUP TO TECUMSEH, AT THE SUPPLIER'S EXPENSE, FORWARD THE

DIS.CODE

DO NOT SCALE THIS DRAWING. ALL FERROUS MATERIALS MUST BE NOT WORSE THAN AS RECEIVED OR AT COMPRESSOR ASSEMBLY.

DESCRIPTION
SALES COMPRESSOR

SCALE 1:2 & NOTED

THIS PRINT SUPERSEDES ALL PRINTS PRIOR TO

TECUMSEH PRODUCTS CO.
ANN ARBOR, MICHIGAN

MATERIAL
NOTED

DWG NO.
DCAW120