PART NO. DEAW3

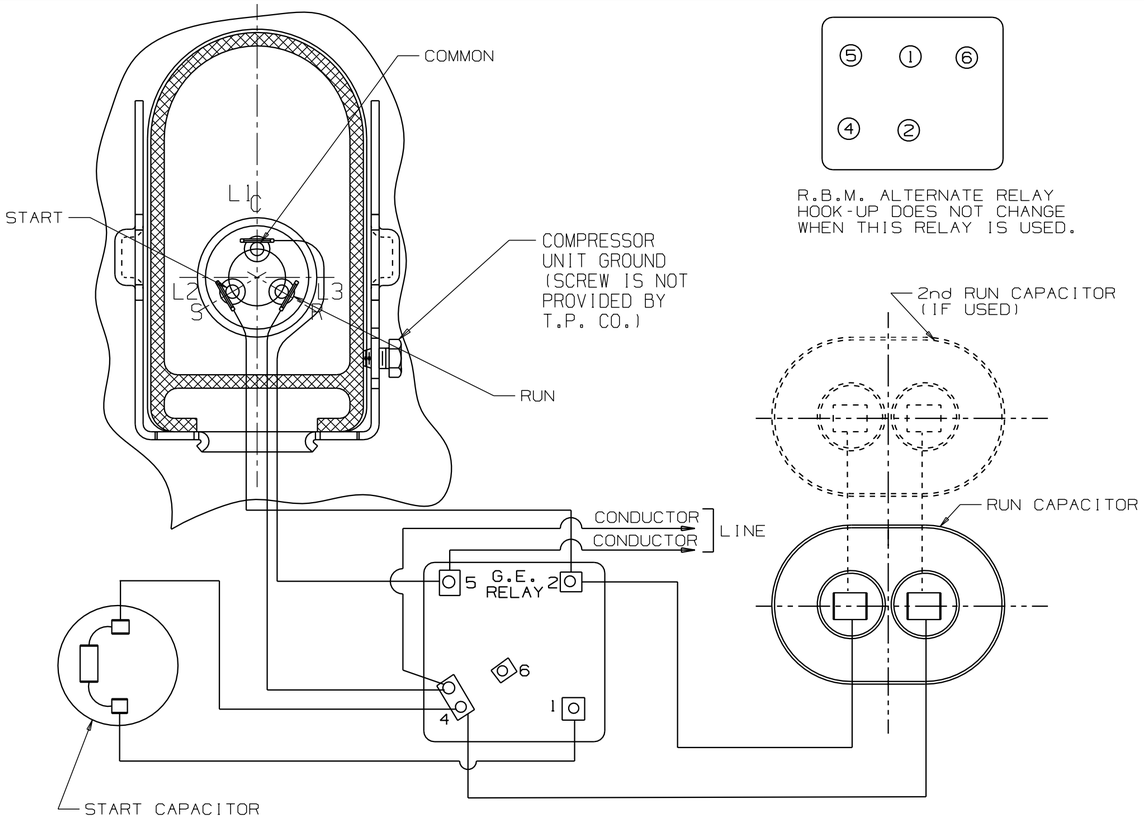

R.B.M. ALTERNATE RELAY HOOK-UP DOES NOT CHANGE WHEN THIS RELAY IS USED.

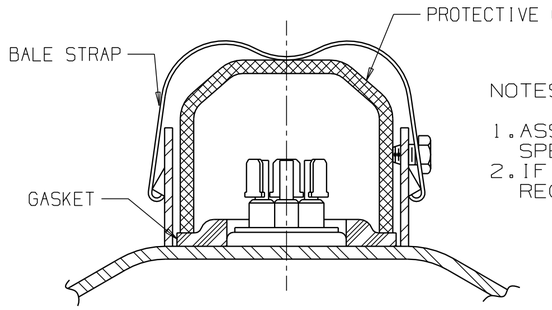

NOTES:

1. ASSEMBLE PARTS AS SHOWN IF SPECIFIED ON B/M.
2. IF TWO RUN CAPACITORS ARE REQUIRED HOOKUP AS SHOWN.

WARNING - WIRING DIAGRAM MUST BE FOLLOWED AS SHOWN. ANY MISWIRING CAN CAUSE SERIOUS ELECTRICAL HAZARD AND POTENTIAL DAMAGE OR RUPTURE OF COMPONENT ELECTRICAL PARTS.

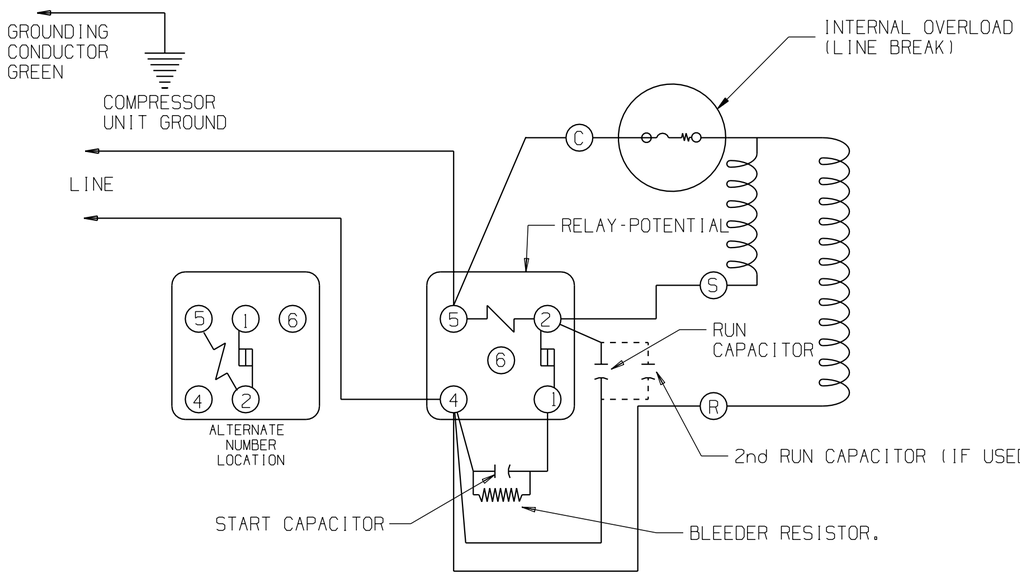

230 VOLT SCHEMATIC WIRING DIAGRAM-CSR OR CSR START CAPACITOR ASSIST -INTERNAL OVERLOAD (LINE BREAK)-REF.DWG.MD472-69 (B) REF.DWG MD472-69

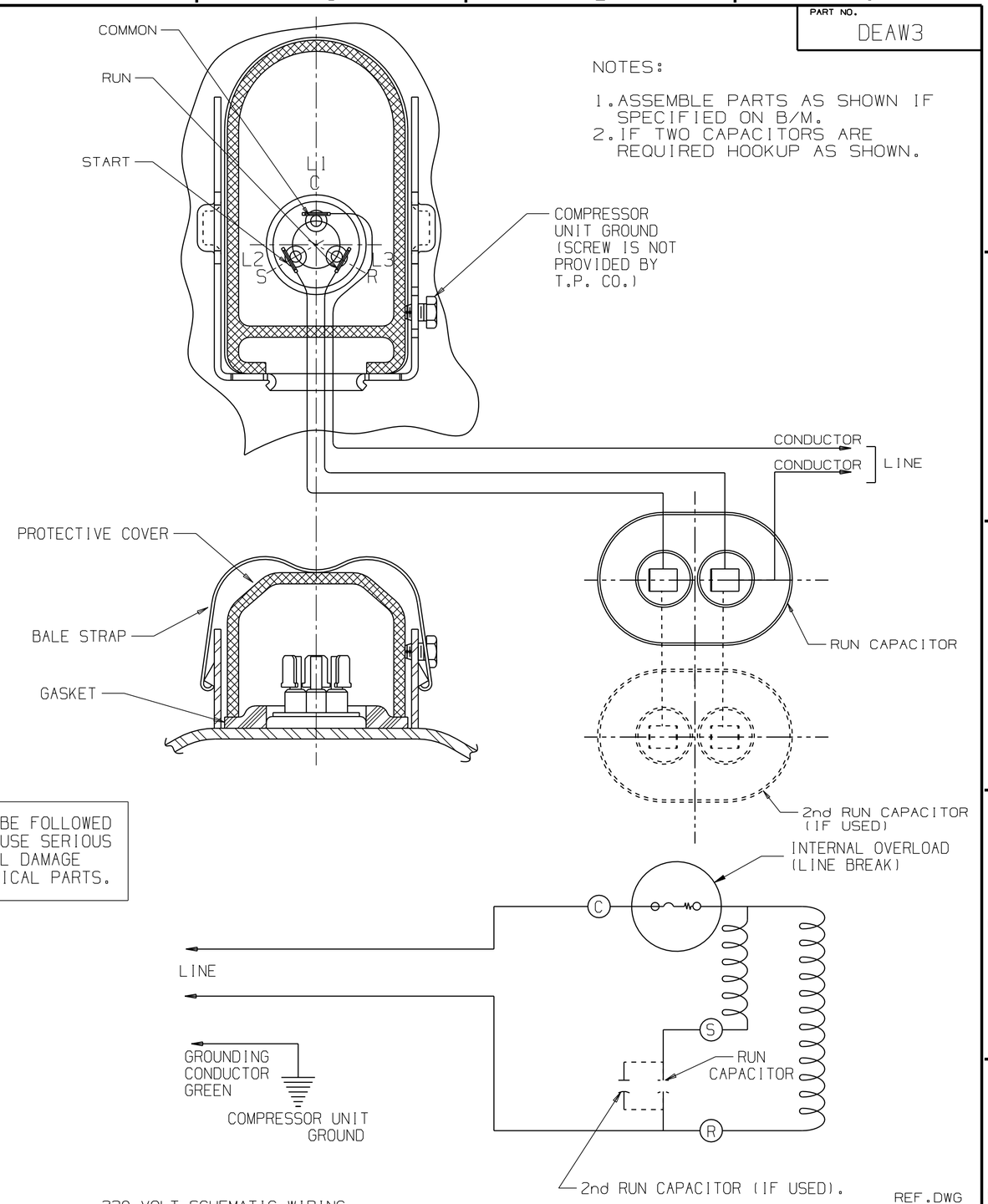

NOTES:

1. ASSEMBLE PARTS AS SHOWN IF SPECIFIED ON B/M.
2. IF TWO CAPACITORS ARE REQUIRED HOOKUP AS SHOWN.

230 VOLT SCHEMATIC WIRING DIAGRAM-PSC-INTERNAL OVERLOAD (LINE BREAK)

REF.DWG MD472-68

AW - 230V - PSC-INTERNAL OVERLOAD (LINE BREAK).
AW - 230V - CSR OR CSR START CAPACITOR ASSIST-INTERNAL OVERLOAD (LINE BREAK).

AW

ENGLISH

Q.A. SYMBOLS
☆ : CATEGORY I
△ : CATEGORY II
□ : CATEGORY III
: CATEGORY IV

LT	LC	CHANGE	DATE
		#244025-000 REF. DWG MD472-69 WAS MD472-34	ROHIT 18AUG05
B	5A	#235547 REDRAWN TO CAD	---
A	--		

THIS DRAWING OR PRINT (S) IS THE PROPERTY OF TECUMSEH PRODUCTS COMPANY AND CONTAINS PROPRIETARY AND CONFIDENTIAL INFORMATION OF TECUMSEH. IT IS MADE AVAILABLE TO THE RECIPIENT ON THE EXPRESS AND IMPLIED CONDITION THAT NEITHER IT NOR THE INFORMATION CONTAINED THEREIN WILL BE DISCLOSED OR MADE AVAILABLE TO OTHERS WITHOUT THE EXPRESS AND SPECIFIC WRITTEN CONSENT OF TECUMSEH AND THAT SUCH INFORMATION SHALL NOT BE USED EXCEPT AS APPROVED EXPRESSLY IN WRITING BY TECUMSEH. IN NO MANNER OR TO ANY EXTENT WITHOUT SPECIFIC WRITTEN CONSENT AND AND OTHERWISE (III) SHALL NOT BE COPIED OR REPRODUCED IN ANY MANNER OR TO ANY EXTENT WITHOUT SPECIFIC WRITTEN CONSENT AND (IV) SHALL BE RETURNED BY THE RECIPIENT LATTER'S REQUEST PROMPTLY AFTER SUCH REQUEST IS MADE.

DIS.CODE 34SU

NAME ELECTRICAL HOOK-UP

DO NOT SCALE THIS DRAWING. FERROUS MATERIALS MUST NOT BE MAGNETIZED AS SUCH WILL DAMAGE THE COMPRESSOR ASSEMBLY.

SCALE 1:1

THIS PRINT SUPERSEDES ALL PRINTS PRIOR TO

TECUMSEH PRODUCTS CO.
TECUMSEH, MICHIGAN

MATERIAL -------

DRAWING NO. DEAW3

User: amit Part/Rev: aw-deaw3_b-c.prt Date: 24-Aug-05 Time: 13:45