PART NO. DCAW093

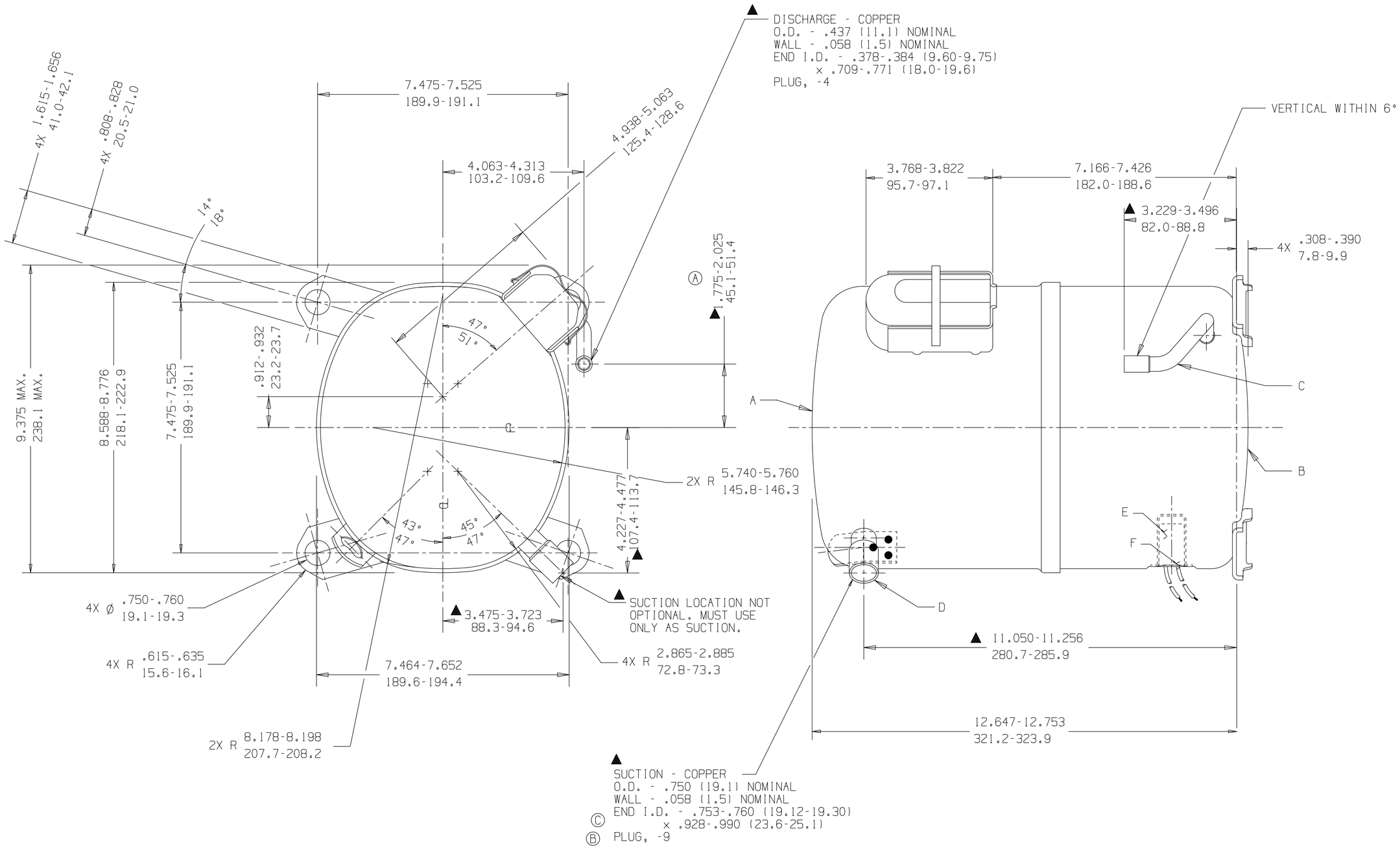

MANUFACTURING NOTES

1. SEE DWG. #AHT38 FOR ASSY. OF DISCHARGE CONNECTOR & LOWER SHOCK LOOP IN LOWER HOUSING.
2. SEE SPEC. "A-B" & "A-C" FOR PROCESSING.

NOTE

1. IF SPECIFIED ON BILL OF MATERIAL ASSEMBLE THESE PARTS AS SHOWN.

DIMENSIONING = INCHES / MILLIMETERS OR INCHES (MILLIMETERS)

AWG

Q.A. SYMBOLS
✡ = CATEGORY I
▲ = CATEGORY II
▩ = CATEGORY III
= CATEGORY IV

A	HA642-25		#240848-000 WAS -32	T.M.G 9JUL01					
B	HA674-4					#232836-002 WAS PLUG -9	T.M.G 2/10/98		
C	34711						#236029-000 WAS 2.156-2.406 54.8-61.1	HINMAN 08/05/97	
D	34721								
E	90706								
F	28080-3								
			C	5B	CK.	B	5B	A	5E
					APR.				

CHANGE	DATE
#233955-151	
REL	
LT LC	

THIS DRAWING OR PRINT (I) IS THE PROPERTY OF TECUMSEH PRODUCTS COMPANY (TECUMSEH) AND CONTAINS PROPRIETARY AND CONFIDENTIAL INFORMATION BELONGING TO TECUMSEH. (II) IS MADE AVAILABLE TO THE RECIPIENT ON THE EXPRESS AND SPECIFIC CONDITION THAT NEITHER IT NOR THE INFORMATION CONTAINED THEREIN SHALL BE DISCLOSED OR MADE AVAILABLE TO THIRD PARTIES WITHOUT THE PRIOR SPECIFIC WRITTEN CONSENT OF TECUMSEH, EXCEPTIN THE EXTENT NECESSARY AND SPECIFICALLY APPROVED IN WRITING BY TECUMSEH. (III) SHALL NOT BE USED FOR ANY PURPOSE OTHER THAN THAT FOR WHICH IT IS SPECIFICALLY FURNISHED. (IV) SHALL NOT BE COPIED OR DUPLICATED IN ANY MANNER WHATSOEVER WITHOUT THE PRIOR TECUMSEH WRITTEN CONSENT AND (V) UPON TECUMSEH'S REQUEST, THE RECIPIENT SHALL PROMPTLY RETURN THEREOF TO TECUMSEH AT THE ADDRESS SPECIFIED BY TECUMSEH IN SUCH REQUEST. IF SUCH REQUEST IS MADE, THE RECIPIENT SHALL PROMPTLY DESTROY ALL COPIES THEREOF IN ITS POSSESSION AND CONFIRM SUCH DESTRUCTION TO TECUMSEH IN WRITING.

DIS.CODE

DO NOT SCALE THIS DRAWING. ALL FERROUS MATERIALS MUST NOT BE MAGNETIZED AS RECEIVED OR AT COMPRESSOR ASSEMBLY.

NAME: SALES COMPRESSOR

DWN. SHERMAN 3-18-97 | CK. | APR. | SCALE

TECUMSEH PRODUCTS COMPANY

THIS PRINT SUPERSEDES ALL PRINTS PRIOR TO

MATERIAL: NOTED

PART NO. DCAW093

BANNER