PART NO. DCAW104

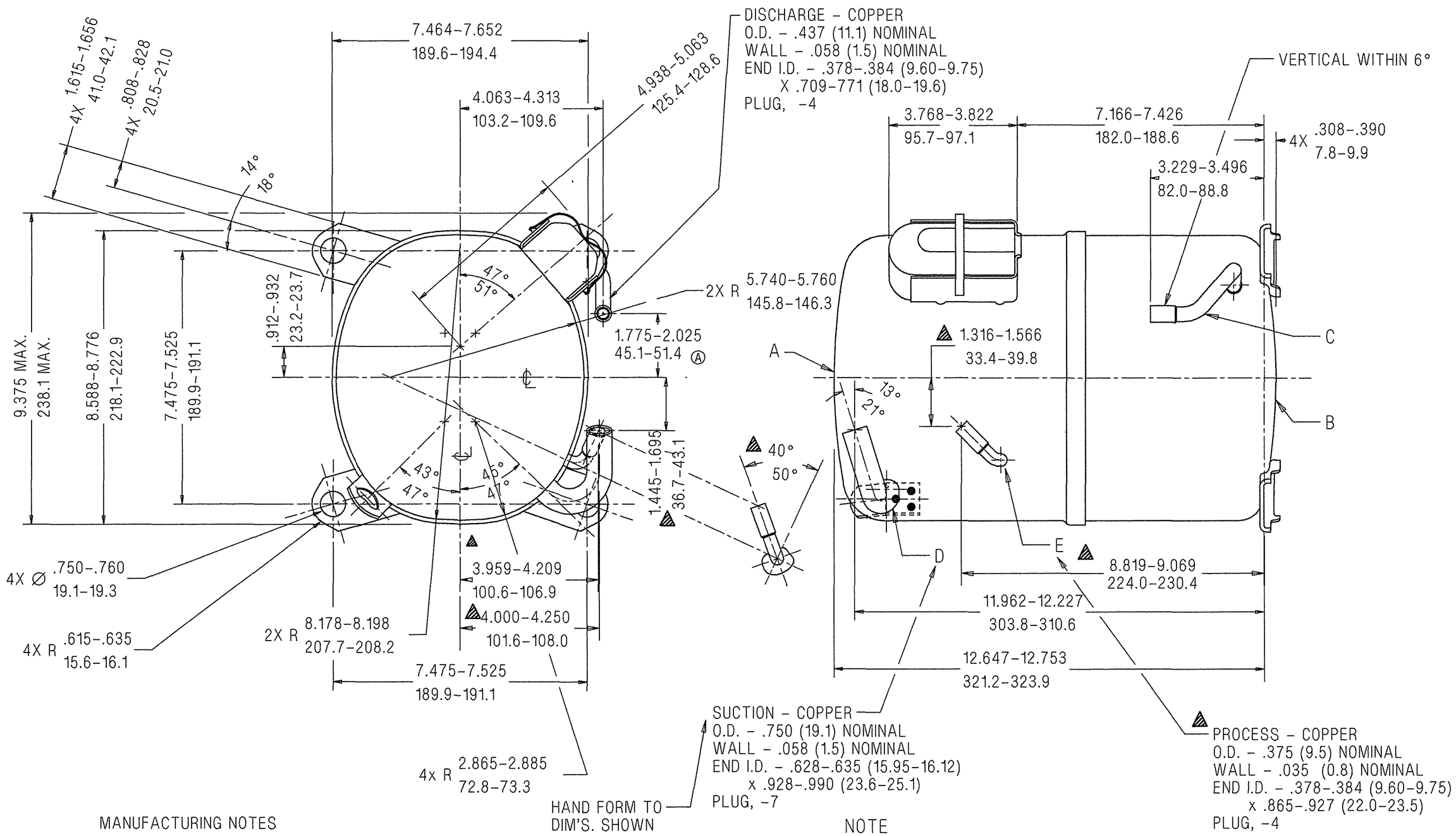

MANUFACTURING NOTES

1. SEE DWG. #AHT38 FOR ASSY. OF DISCHARGE CONNECTOR & LOWER SHOCK LOOP IN LOWER HOUSING.
2. SEE SPEC. "A-B" & "A-C" FOR PROCESSING.

NOTE

1. IF SPECIFIED ON BILL OF MATERIAL ASSEMBLE THESE PARTS AS SHOWN.

DIMENSIONING = INCHES / MILLIMETERS OR INCHES (MILLIMETERS)

AWG

Q.A. SYMBOLS

A	HA642-26		HINMAN 08/05/97	—	
B	HA674-3		#236029-000 WAS 2.156-2.406 54.8-61.1	#233955-151	
C	34711				
D	34649				
E	34467				
			A 5E	REL	

LT LC CHANGE DATE

THIS DRAWING OR PRINT (I) IS THE PROPERTY OF TECUMSEH PRODUCTS COMPANY OR CONTAINS PROPRIETARY AND CONFIDENTIAL INFORMATION BELONGING TO TECUMSEH. INFORMATION AVAILABLE TO THE RECIPIENT ON THE EXPRESS AND IMPLIED CONDITION THAT NEITHER IT NOR THE INFORMATION CONTAINED THEREON OR DISCLOSED THEREIN SHALL BE DUPLICATED, USED OR DISCLOSED TO OTHERS WITHOUT THE EXPRESS AND WRITTEN CONSENT OF TECUMSEH AND THAT SUCH INFORMATION ONLY AS EXPRESSLY AND SPECIFICALLY AGREED TO BY TECUMSEH IN WRITING SHALL NOT BE KEPT CONFIDENTIAL. (II) SHALL MAKE NO USE OF THE INFORMATION IN ANY MANNER OR TO ANY EXTENT WITHOUT TECUMSEH'S PRIOR EXPRESS AND WRITTEN CONSENT. (III) SHALL NOT SHALL BE RETURNED BY THE RECIPIENT TO TECUMSEH WHENEVER TECUMSEH OR THE LATTER'S REQUEST PROMPTLY AFTER SUCH REQUEST IS MADE.

DIS.CODE 34D

NAME SALES COMPRESSOR

DWN. CK. APR. SCALE 1"=2"

THIS PRINT SUPERSEDES ALL PRINTS PRIOR TO

DO NOT SCALE THIS DRAWING. ALL DIMENSIONS MUST BE MAGNETIZED AS RECEIVED OR AS COMPRESSOR ASSEMBLY.

TECUMSEH PRODUCTS CO.
TECUMSEH, MICHIGAN

MATERIAL NOTED

INTERNAL USE ONLY
UGII(DISK6:[HINMAN]AW-DCAW104□A-C.PRT

PART NO. DCAW104