PART NO.
DCAW094

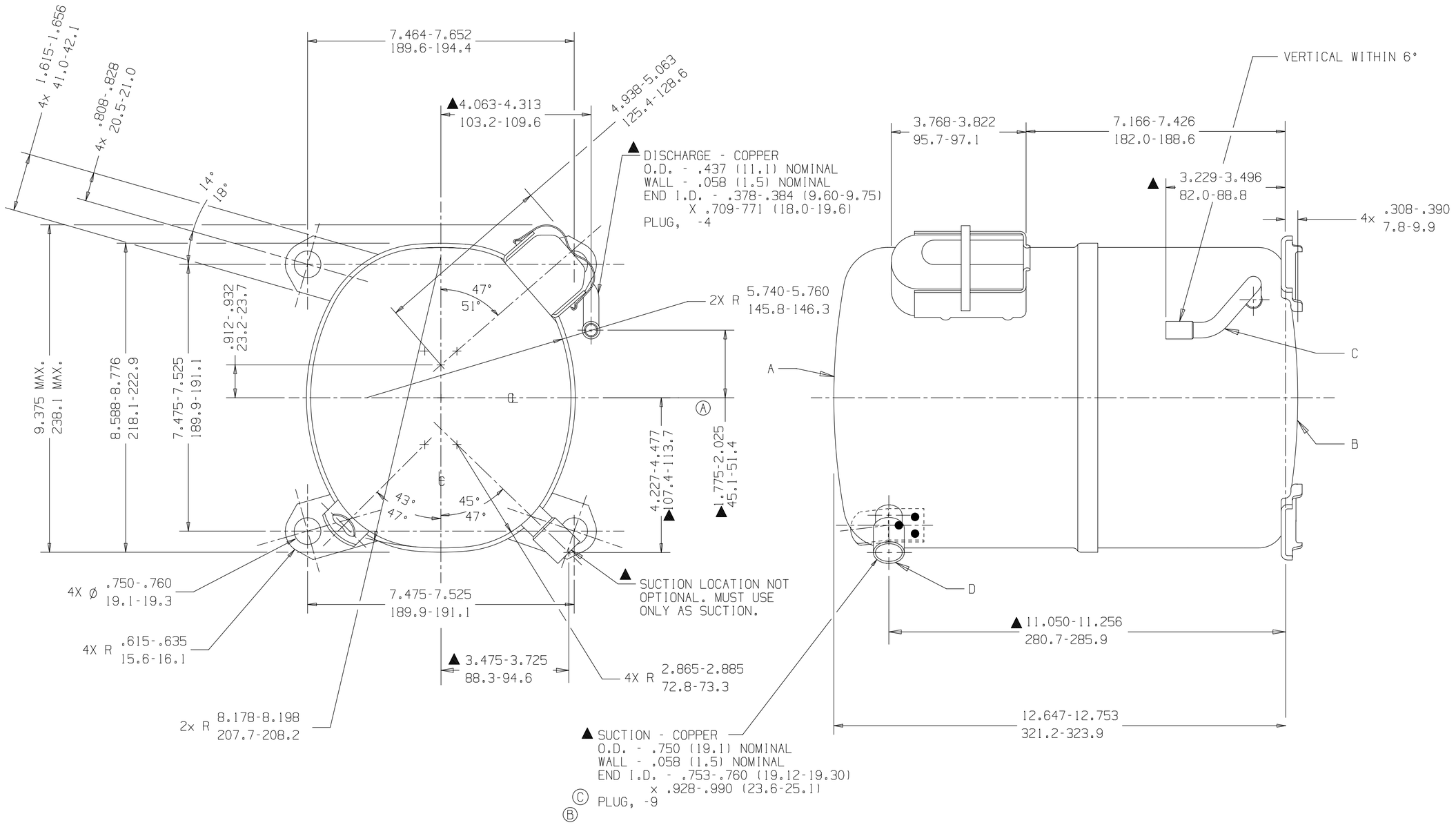

NOTE

1. IF SPECIFIED ON BILL OF MATERIAL ASSEMBLE THESE PARTS AS SHOWN.

MANUFACTURING NOTES

1. SEE DWG. #AHT38 FOR ASSY. OF DISCHARGE CONNECTOR & LOWER SHOCK LOOP IN LOWER HOUSING.
2. SEE SPEC. "A-B" & "A-C" FOR PROCESSING.

DIMENSIONING = INCHES / MILLIMETERS OR INCHES (MILLIMETERS)

Q.A. SYMBOLS
✡ = CATEGORY I
▲ = CATEGORY II
▩ = CATEGORY III
= CATEGORY IV

AWG

A	HA642-25			#240848-000 WAS -32	T.M.G 9JUL01		
B	HA674-3						
C	34711						
D	34721			#232836-002 WAS PLUG -9	T.M.G 2/10/98		
E				#236029-000 WAS 2.156-2.406 54.8-61.1	HINMAN 08/05/97		
				#233955-151	—		
				CHANGE	DATE		
				C B5			
				B B5			
				A 5E			
				REL			
				LT LC			

CK. APR.

THIS DRAWING OR PRINT (ii) IS THE PROPERTY OF TECUMSEH PRODUCTS COMPANY (TECUMSEH) AND CONTAINS PROPRIETARY AND CONFIDENTIAL INFORMATION OF TECUMSEH. (iii) IS MADE AVAILABLE TO THE RECIPIENT ONLY UNDER THE SPECIFIC CONDITION THAT NEITHER IT NOR THE INFORMATION CONTAINED THEREIN SHALL BE DISCLOSED OR MADE AVAILABLE TO OTHERS WITHOUT THE WRITTEN CONSENT OF TECUMSEH EXPRESSLY AND SPECIFICALLY OBTAINED IN ADVANCE. THIS DRAWING OR PRINT MAY NOT BE COPIED OR DUPLICATED IN ANY FORM OR MANNER WHATSOEVER WITHOUT TECUMSEH'S PRIOR EXPRESS AND SPECIFIC WRITTEN CONSENT AND (iv) UPON REQUEST TO TECUMSEH, THE RECIPIENT SHALL RETURN THE SAMPLE THEREOF TO TECUMSEH AT THE LATTER'S ADDRESS WHICH MAY FOLLOW SUCH REQUEST IS MADE.

DIS.CODE

DO NOT SCALE THIS DRAWING. ALL FERROUS MATERIAL WILL NOT BE MAGNETIZED AS RECEIVED OR AT COMPRESSOR ASSEMBLY.

NAME: SALES COMPRESSOR

DWN. SHERMAN 3-18-97 | CK. | APR. | SCALE

TECUMSEH

MATERIAL: NOTED

THIS PRINT SUPERSEDES ALL PRINTS PRIOR TO

PART NO. DCAW094

BANNER