PART NO. DCAW104

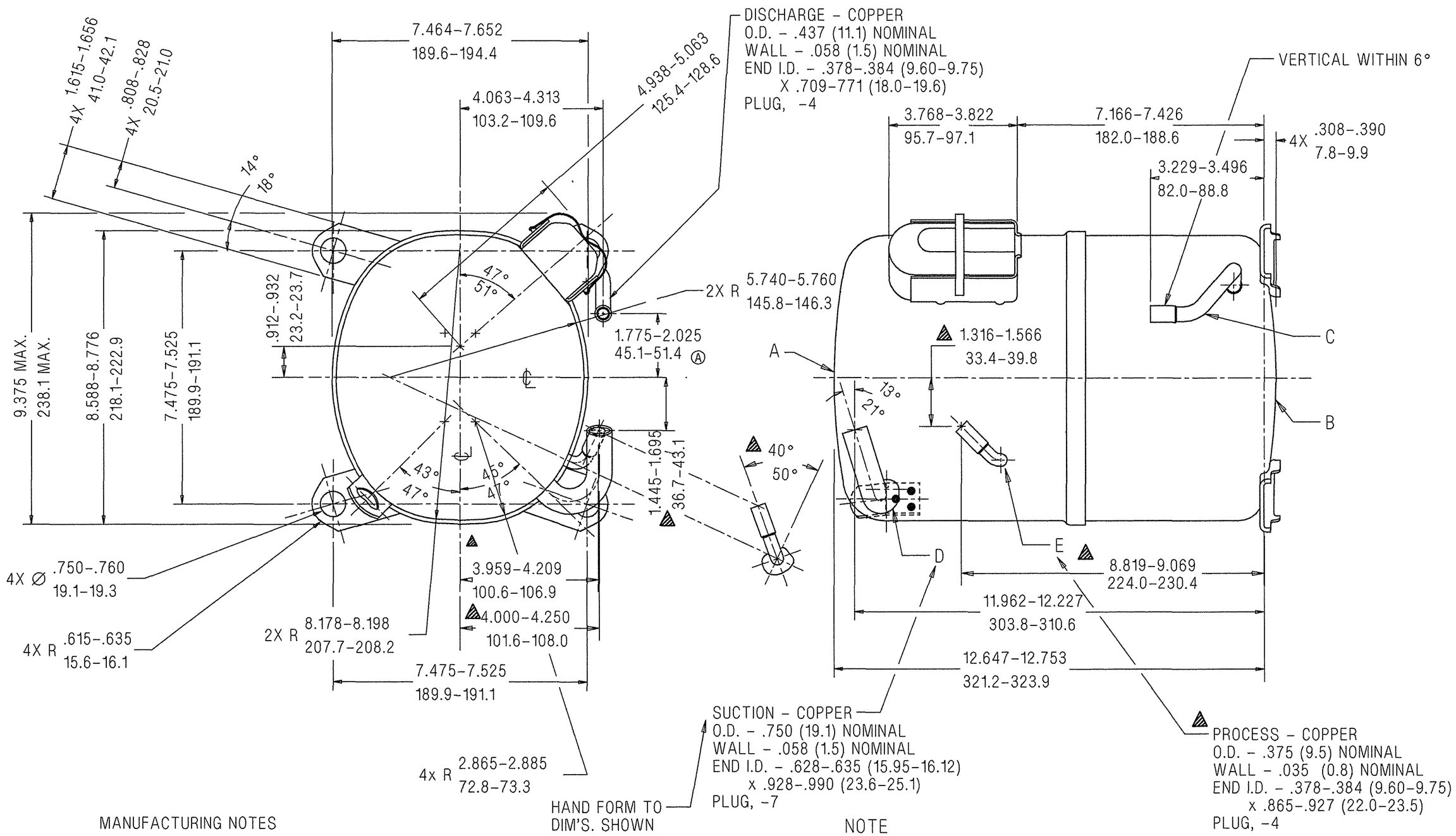

MANUFACTURING NOTES

1. SEE DWG. #AHT38 FOR ASSY. OF DISCHARGE CONNECTOR & LOWER SHOCK LOOP IN LOWER HOUSING.
2. SEE SPEC. "A-B" & "A-C" FOR PROCESSING.

NOTE

1. IF SPECIFIED ON BILL OF MATERIAL ASSEMBLE THESE PARTS AS SHOWN.

DIMENSIONING = INCHES / MILLIMETERS OR INCHES (MILLIMETERS)

Q.A. SYMBOLS

AWG

A	HA642-26		HINMAN 08/05/97	—	
B	HA674-3		#236029-000 WAS 2.156-2.406 54.8-61.1	#233955-151	
C	34711				
D	34649				
E	34467				
			A 5E	REL	

LT LC | CHANGE | DATE

THIS DRAWING OR PRINT (I) IS THE PROPERTY OF TECUMSEH PRODUCTS COMPANY OR ITS SUBSIDIARIES PROPRIETARY AND CONFIDENTIAL INFORMATION BELONGING TO TECUMSEH. (II) MAY NOT BE COPIED OR DISCLOSED TO RECIPIENT ON THE EXPRESS AND IMPLIED UNDERSTANDING THAT RECIPIENT WILL NOT USE IT THEREON OR DISCLOSED THEREIN SHALL NOR THE INFORMATION CONTAINED OTHERS WITHOUT THE EXPRESS AND WRITTEN CONSENT OF TECUMSEH AND THAT SUCH INFORMATION ONLY AS EXPRESSLY AND SPECIFICALLY AUTHORIZED IN WRITING BY TECUMSEH AND NOT OTHERWISE (III) SHALL NOT BE COPIED OR DISCLOSED TO ANY MANNER OR TO ANY EXTENT WITHOUT TECUMSEH'S PRIOR EXPRESS AND WRITTEN CONSENT. (IV) THIS PRINT SHALL BE RETURNED BY THE RECIPIENT SHALL BE RETURNED TO TECUMSEH AT LATTER'S REQUEST PROMPTLY AFTER SUCH REQUEST IS MADE.

DIS.CODE 34D

NAME SALES COMPRESSOR

SCALE 1"=2"

THIS PRINT SUPERSEDES ALL PRINTS PRIOR TO

DO NOT SCALE THIS DRAWING. ALL DIMENSIONS MUST BE MAGNETIZED AS RECEIVED FOR A COMPRESSOR ASSEMBLY

TECUMSEH PRODUCTS CO.
TECUMSEH, MICHIGAN

MATERIAL NOTED

INTERNAL USE ONLY
UGII(DISK6:[HINMAN]AW-DCAW104□A-C.PRT

PART NO. DCAW104